SANDVIK

DL422i
Longhole drill

Technical Specification

Fully automated productivity

Sandvik DL422i is a fully automated longhole drill, designed for underground mass mining in 4 x 4 m or larger production drifts.

It is capable of drilling vertical and inclined fans and single or parallel Ø89-127 mm longholes up to 54 m in depth using ST58 and ST68 tube rods.

This intelligent longhole drill features the latest technology in drilling automation, data management and tele-remote operation.

Continuous and unmanned operation during shift changes and breaks combined with comprehensive data collection and transfer through wireless networks ensure improved equipment utilization and productivity.

Key features

Minimum drift size (H and W)	4.00 - 3.50 m
Minimum drift width in T-section	4 200 mm
Boom coverage (vertical holes)	3 000 mm
Transport height (with cabin)	3 100 mm
Transport width	2 480 mm
Transport length	10 960 mm
Transport weight	32 000 kg

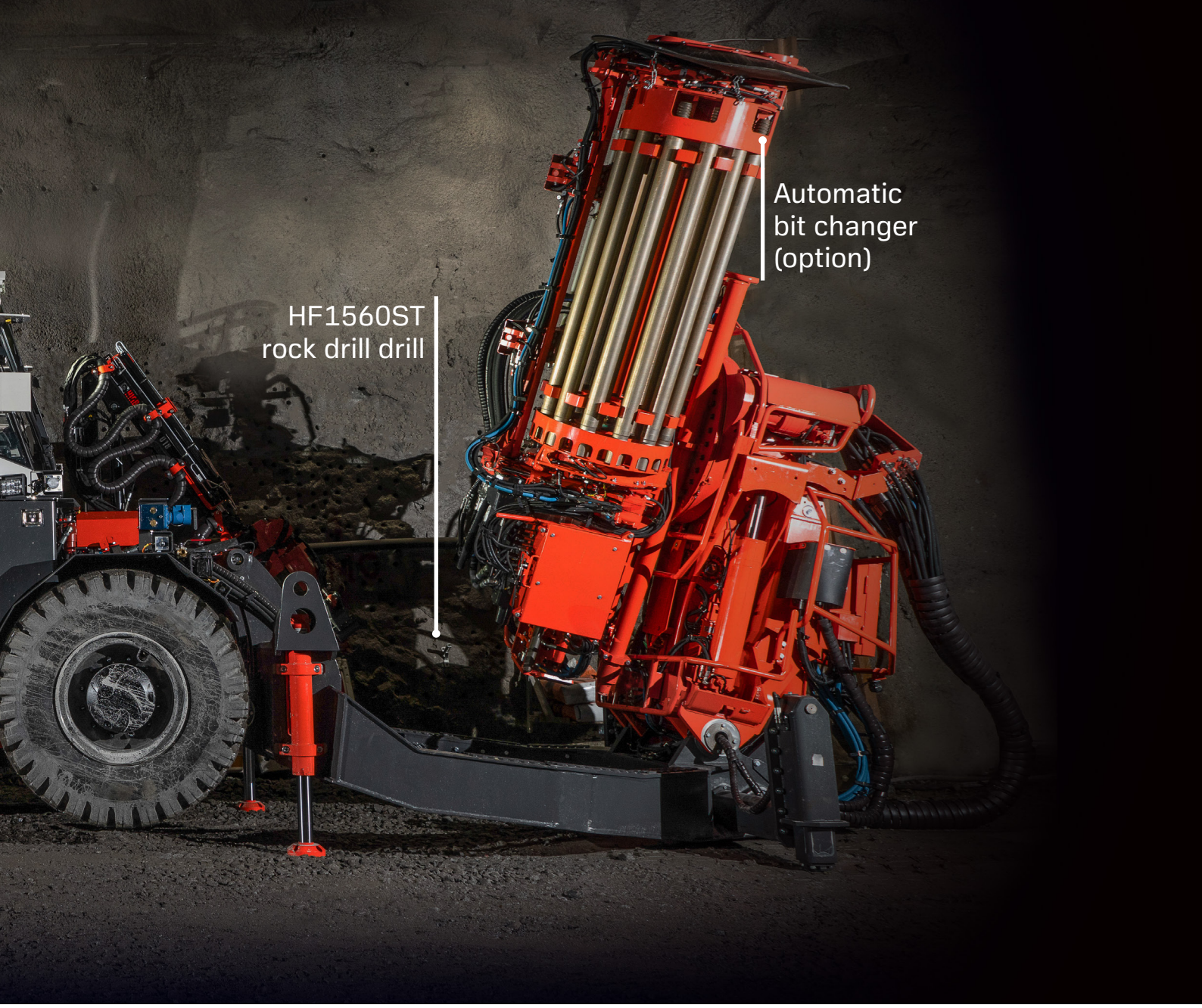

Main benefits

High automation level

Sandvik DL422i is delivered with Platinum automation package (option) for continuous and automated production drilling allowing maximized productivity and good accuracy in drilling fans and parallel longholes.

The option AutoMine® for underground drills enables an operator to remotely control and simultaneously supervise one or multiple drills.

In addition, the DL422i can also be equipped (optionally) with an automatic bit changer, making autonomous drilling of complete fans possible as well as working through shift changes.

Shorter drilling cycle time

Up to 10%* more drilled meters per shift

Increased productivity

Up to 20%* improved equipment utilization

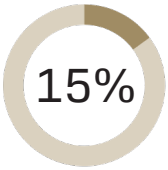

Improved performance

15%* higher net penetration rates

Optimized working environment

Modern and ergonomic cabin for maximum operator comfort with improved visibility and reduced noise level.

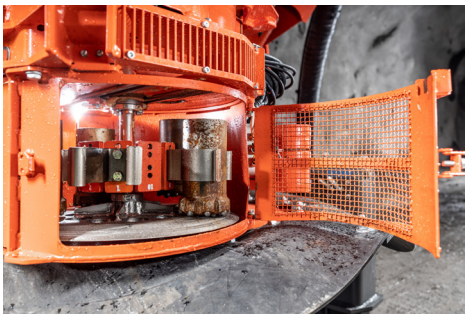

Drill bit changer (option)

Integrated in the one-hole and fan automation offering, the automatic bit changer allows autonomous drilling of complete fans through shift changes. The capacity of the revolver type carousel is 5 to 10 bits.

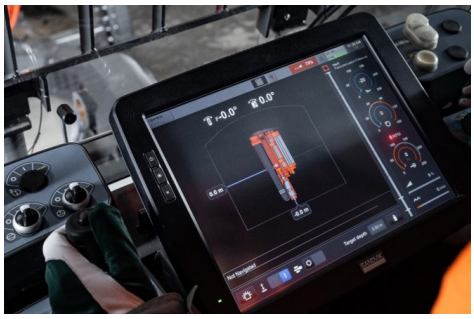

Automation package: Platinum (option)

Drilling automation package Platinum for repeating drilling cycles automatically with speed and precision.

Tele-remote drilling operation (option)

Tele-remote drilling and tramming allows a better utilisation of workforce and equipment and improved operator safety and performance.

Digital solutions

Readiness for DrillConnect mobile application for improved data management and enhanced maintenance, and My Sandvik digital services.

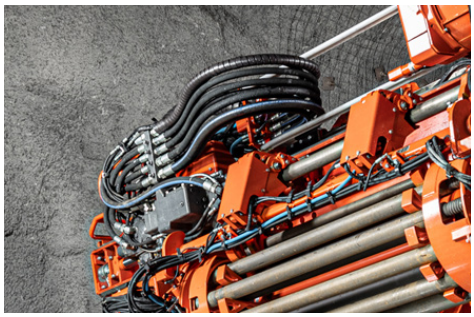

Powerfull HL1560ST rock drill - 33 kW

Provides high penetration rates and drilling capacity, in hard to medium hard formations. Optimum bit–rock contact for improved energy transfer.

Sandvik 365 Parts and Services

Proudly keeping you on track!

Sandvik 365 Parts & Services offer a variety of possibilities to enhance your Sandvik DL422i drill's performance performance. As an OEM, we provide the best-suited choices to preserve your machine's high performance throughout its lifetime.

These consist of highly skilled service specialists supporting you 365 days a year, all using Sandvik Genuine parts and components complemented by a range of robust tools.

In addition, you get to enjoy the benefits of advanced digital services and a global infrastructure dedicated to keeping your Sandvik fleet on track.

Technical Specification

Rock tools and hole length

Rod and hole diameter			Rock drill	Max. hole length (m)*		
Thread	Rod Ø (mm)	Hole Ø (mm)		4' rods	5' rods	6' rods
T38	39 (rods)	64	RD921S	37.5	45.5	54.6
T45	46 (rods)	76	RD921S	37.5	45.5	54.6
T45	65 (tube)	76	RD925M	37.5	45.5	54.6
T51	52 (rods)	89	RD925M RD927L	37.5	45.5	54.6
ST58	76 (tube)	89 -102	HF1560ST HL1560ST	37.5	45.5	54.6
ST68	87 (tube)	102 -127	HF1560ST HL1560ST	37.5	45.5	54.6

**) Feed in contact with rock, front stinger retracted*

Hydraulic rock drill

Type of rock drill	HF1560ST (TS2-419)
Percussion power	33 kW
Percussion pressure	Up to 200 bar
Percussion rate	35 - 45 Hz
Stabilizer	Sleeve type
Rotation speed	0 - 100 rpm
Rotation torque	2 330 Nm (OMT500)
Weight	490 kg
Length with shank adapter	1 505 mm

Drilling module

Type of drilling module	LFRC1606 (TS2-342)
Storing capacity	29 + 1 rods (all threads)
Retaining centralizer	Pito 16
Cuttings diverter	CC1016
Set-off from stope face	2 055 mm (minimum)
Feed force	31 kN
Feed and return speed	Up to 0.3 m/s (fast feed)
Front stinger extension	2 180 mm

Drilling module dimensions

Type	LFRC1606 (Standard)	LFRC1605 (Option)	LFRC1604 (Option)
Rod / tube length	6' (1 830 mm)	5' (1 525 mm)	4' (1 220 mm)
Total feed length*	4 044 mm	3 739 mm	3 434 mm

**) Remove 45 mm without bit changer*

Longhole boom

Telescopic boom	ZR35 (TS2-465)
Boom support type	Frame (horseshoe)
Boom swing	Left 45° / Right 45°
Boom (fan) tilt (std horseshoe) (long horseshoe)	Back 26° / Forward 45° Back 40° / Forward 38°
Drilling module roll-over	360°
Boom extension	620 mm
Drilling module travel	1 400 mm (6'), 1 100 mm (5'), 1 000 mm (4')
Pivot point height (boom vertical)	2 310 - 2 930 mm
Front and rear stingers	Mounted on the feed
Rear stinger extension	2 180 mm

Hydraulic system

Powerpack	HPP1590 (90 kW)
Filtration size (pressure / return)	20 µ / 10 µ
Oil tank volume	270 liters
Cooler for hydraulic oil	OW45 oil-to-water (45 kW)
Low oil level indication	Low oil level switch

Drilling control system

Type of control system	iSOLO / SICA
Drilling control modes	15" full colour touch screen
Upgradeable automation levels	In safety cabin
Electronic joystick controls	Torque drilling and feed percussion
15" full color touch screen	Water flow and pressure monitoring
Cable kit for spare part programming	Comprehensive and interactive

Automation package, Silver level (Standard)

One-hole automation	Automatic coupling / uncoupling of rods
Stinger control	Full time monitoring and repressurizing
Drilling control selection	Torque Drilling (default) or manual
Selectable hole length	Torque drilling and feed percussion
Feed and hole parallellism	Assisted

Electric system

Standard voltages	380-690 V (50 or 60 Hz)
Total installed power	110 - 130 kW
Main switch gear	MSE 10
IP-classification	Main switch gear IP66, junction boxes ≥ IP68
Allowed voltage fluctuation	± 10%
Current reducer unit	Standard (power factor > 0.95)
Starting method	Star-Delta (380-690 V), DOL (1000 V)
Automatic cable reel	TCR4CD and spooling system
Cable reel remote control	At operator station and cable reel
Front lights (combined working and driving)	6 x 50 W (24 V) LED >125 lx / 20000 lm / 6000 K
Rear lights (combined working and driving)	2 x 50 W and 2 x 17 W (24 V) LED 8000 lm / 6000 K
Carrier positioning lights	2 x Laser type
Braking lights and blinkers	LED (24V)
Stair and service lights	LED (24 V)
Parking lights	LED (24V)
Sealed AGM batteries	2 x 12 V (100 Ah)
Electric quality monitoring	Voltage, Amperage, Power, Pf Phase-sequence
Motor protection	Intelligent control with power maximization
Extra low voltage supply	Continuous 80 A/27 V DC with battery back-up and management

Air and water flushing system

Flushing of holes	By Water
Water booster pump type	WBP3HP (11 kW / 50 Hz)
Water pump capacity	375 l/min at 15 bar (inlet 5 bar)
Flushing water pressure	10 - 20 bar
Shank lubrication device	SLU1 (air / oil mist)
Air compressor	CTN 10 (1.0 m^3/min at 7 bar)
Air cleaner for external air supply	IP5 and connection
Rock drill oil consumption	300 - 500 g/h
Rock drill air consumption	400 - 500 l/min

Technical Specification

Operator's safety cabin

Cabin certification	FOPS / ROPS (ISO 3449)
Cabin inside height	2 020 mm
Sound pressure level	Operator station 69 dB(A) EN791 / ISO4872 / ISO1120
Vibration level	According to EN791/ISO2631-1
Operator's seat	For drilling and tramming
Air conditioning system	EU6/7 filtering capacity
Cabin safety grill	For front screen
Audio system	CD / MP3-player, radio and loudspeakers
Electrical outlets (16 A)	12 / 24 V (DC) and 110 / 230 V (AC)
Cabin boot washer	At cabin entrance
Tramming cameras	Front, side and rear

Carrier

Type of carrier	C400D (frame-steered)
Carrier articulation	± 40°
Rear axle oscillation	± 8°
Ground clearance	330 mm
Diesel engine	QSB4.5, 127 kW, Tier 3
Exhaust catalyzer	Standard
Transmission	Hydrostatic
Drop box	Dana Spicer 305D
Axles	Dana 114 (front) Dana 113 (rear)
Tires	14.00-24 PR28
Brakes	SAHR fail safe wet disc brakes
Tramming speed	Horizontal (0%): 12 km/h 14% = 1:7 = 8°: 5.5 km/h
Gradeability / sideways tilt	Max. 15° (27 %) / 5° (9 %)
Carrier stabilization	2 x SJ500 telescopic jacks (front) 2 x SJ600 jacks (rear)
Fuel tank	150 liters
Oil tank filling pump	Electric
Hand held fire extinguisher	7.7 or 9 kg (type ABC)
Centralized greasing points	Standard
Tramming alarm	Standard
Tramming cameras	Front, rear and side
Hill holder	Standard
Levelling indicators	Spirit level/monitor indication
Knowledge Box™	Connectivity solution (TS2-535)
Colour scheme	Sandvik standard
Documentation	1 x Operator's manual 1 x Maintenance manual 1 x Technical manual English only) 1 x Parts manual (English only) 2 x Toolman USB key

Automation package, Platinum level (option)

Data transfer	USB/WLAN (excl. drill plan software)
Drill plan management	In the user interface (create, copy and edit)
Boom automatic positioning	To the next hole
Fan automation	For up- and downhole
DrillConnect mobile application	Connectivity through Knowledge box™ for easy data transfer to and from the rig

Optional features and packages

Drilling system	
*HL1560ST rock drill	Percussion rate 30 – 40 Hz
*RD925M rock drill	For T38 - T51 rods (Ø64–89 mm)
*RD927L rock drill	For T45 - ST58 tube rods (Ø76–89 mm)
*RD1735 rock drill	For T51 - ST58/68 or CT67 (Ø65-127 mm)
*Power extractor	For HL/HF1560ST, RD927L/925M/1735
BC1611 bit changer	For LFRC1600 drilling module
Conversion kit	From one rod/tube size to another
Long boom (horseshoe) support	With dual feed cradle (TS2-551)
Rear stinger extension kit	Extension 1000 mm
Remote drilling control panel	On trolley (including cable)
Tube rod manipulator	Including lifting tool kit
Hydraulic system	
*Cooler for hydraulic oil	OA45 oil-to-air (45 kW) OW55 oil-to-water (55 kW)
Side stream filter	Separated bypass filtering of hydraulic system
Vacuum pump	For hydraulic oil
Instrumentation	
Access detector or protector	Mandatory in Europe (TS2-211)
Spirit level angle indicators	2 pcs (on boom and feed)
Tele-remote operations (WLAN/LAN)	Including data transfer
Cleaning system	
Low pressure system	Up to 15 bar (TS2-343)
High pressure system with reel	Up to 220 bar (TS2-343)
Greasing systems	
Automatic system	Carrier, boom and rod handler
Manual system	Pump reel and nozzle (TS2-463)
Electric system	
*Multivoltage Pro (50 Hz)	380-575 V (YD) or 660-1000 V (DOL)
*Multivoltage Pro (60 Hz)	440-575 V (YD) or 690-1000 V (DOL)
Dewatering pump outlet	Site voltage 380 - 690 V (7.5 kW) Site voltage 1000 V (8 kW)
Powerpack tramming	For transfers less than 25 m
Electric cables	Specification TS2-121
Earth continuity control	For power cable (1-wire pilot circuit)
Ground fault and overcurrent unit	VYK (excluding CAN/USA)
Indicator light for jacks up / down	For front hydraulic jacks
Power outlet on carrier	110 V (16 A, single phase, 1.6 kW) 230 V (15 A, single phase, 2 kW)
Amber flashing light	LED (24 V)
Battery jump start	CAT
Air and water system	
*End-of-hole flushing	CT28, (2.8 m^3/min, 18.5 kW)
1 x 60-liter air receiver	End-of-hole flushing (with CT28)
Air mist flushing kit	For external air and water supply Quick
Compressed air outlet	coupling for pneumatic tools
Thermostats	High and low ambient temperature
Water hose reel and hose	THR2.5E + Ø38 mm hose (65 m)
Operator's safety cabin	
*Stainless steel cabin	FOPS/ROPS (ISO3449)
*Low height cabin and safety grill	FOPS/ROPS (ISO3449), H:2900 mm
Cabin heating system	For drilling and tramming
Fire suppression system	
Spare hand held fire extinguisher	7.7 or 9 kg (type ABC)
Automatic system	DAFO / Forrex / Ansul (6 nozzles)
Manual system	Ansul (6 nozzles)
Carrier	
*Diesel engine	B4.5, 121 kW, Stage V
*Foam filled tires	Set of four
Carrier speedometer	For C400D-series
Wheel chocks and holders	One set each side
Extra items	
Spare rock drill	HF1560ST, HF1560ST or RD927L
Spare wheel assembly	Standard or foam filled tires
Special tools for rock drill	Field kit or complete set
Documentation	Extra manuals
Packages: Country	AUS, USA, CAN, SWE, EU
Package: Environmental	Specification TS2-415
Package: Automation	Platinum
Packages: Air and water onboard	Specification TS2-558
Packages: Dry drilling	Specification TS2-559
Package: Tele-remote	Drilling and tramming

**) Replaces standard feature*

Technical drawings

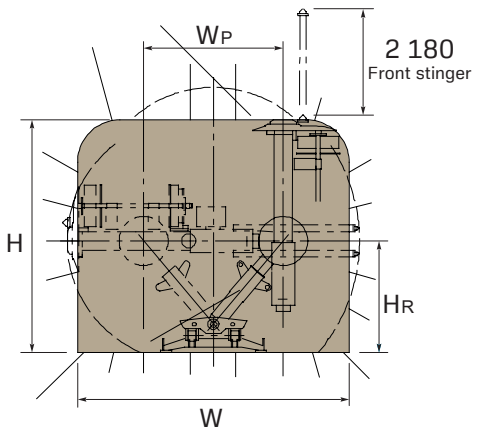

Mimimum production drift size*

		H	W	WP	HR
LFRC1604	mm	4 000	3 500	1 600	2 310
LFRC1605	mm	4 300	3 800	1 900	2 310
LFRC1606	mm	4 600	4 100	2 200	2 310

**) 100 mm clearance*

Maximum production drift size**

		H	W	WP	HR
LFRC1604	mm	4 400	5 800	3 000	2 350
LFRC1605	mm	4 700	6 100	3 000	2 350
LFRC1606	mm	5 000	6 400	3 000	2 350

***) Rear stinger extended, front stinger retracted and feed in forward position; the use of front stinger may increase the maximum production drift size*

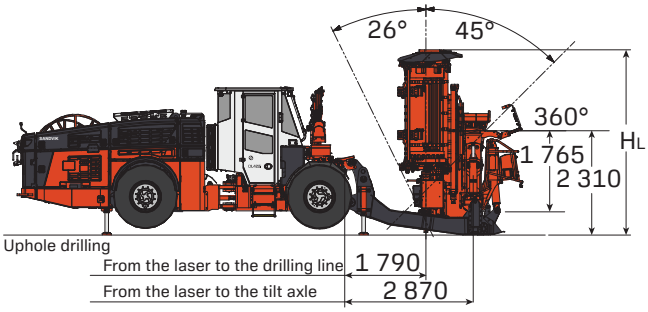

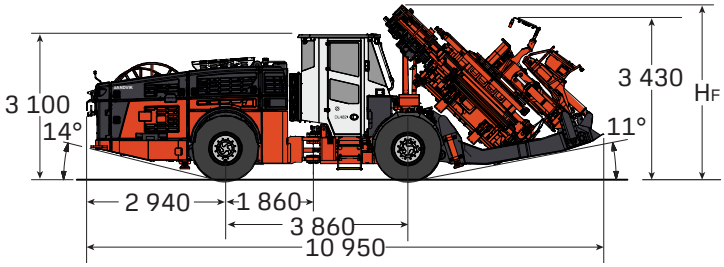

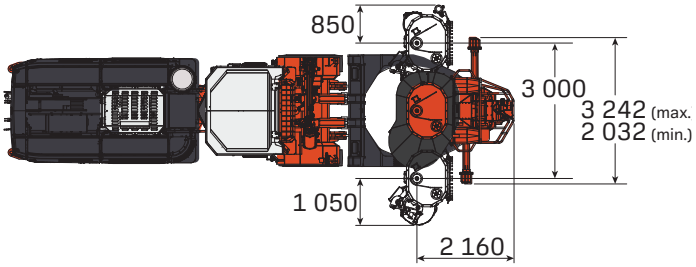

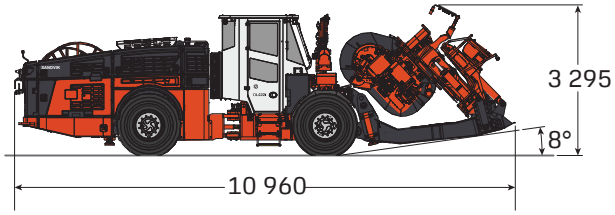

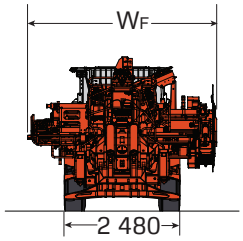

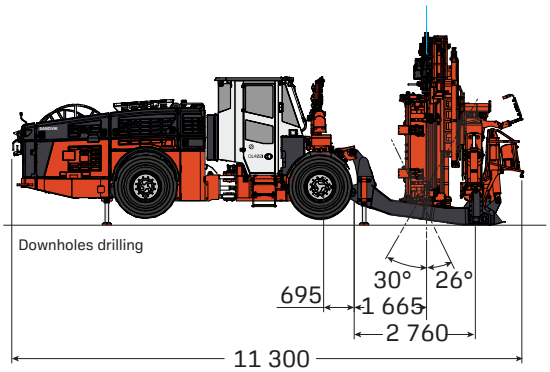

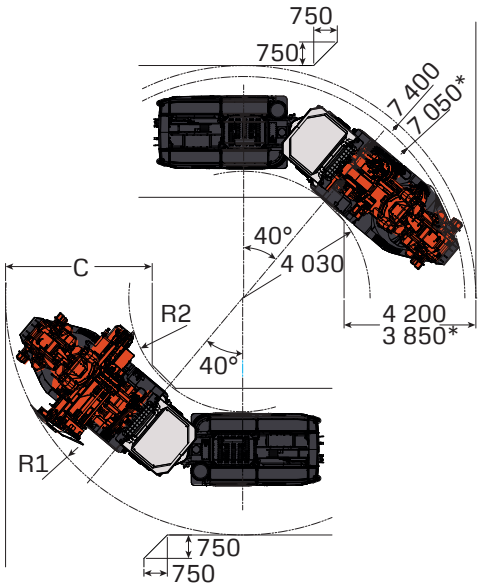

		LF1604	LF1605	LF1606
Height (HL)	mm	3 500	3 800	4 100
Height (HF)	mm	3 300	3 500	3 700
Width (WF)	mm	3 450	3 750	4 050
External radius (R1)	mm	7 250	7 350	7 600
Internal radius (R2)	mm	3 650	3 650	3 650
Cornering (C)	mm	4 300	4 450	4 700

All dimensions in mm

TS2-489:07ENG©Sandvik Mining 2025
SANDVIK , iSURE® and DIGITAL DRILLER™ are trademarks owned by the Sandvik group of companies.

*Test results and calculations are to be considered as results reached under certain and controlled conditions. These test results and calculations should not be treated as specifications and Sandvik does not guarantee, warrant or represent the outcome of test results or calculations in any or all circumstances.

SANDVIK