SANDVIK

DL421
Longhole drill

Technical Specification



mining.sandvik



Fully mechanized longhole drill

Sandvik DL421 is a fully-mechanized and compact electro-hydraulic top hammer longhole drill designed for underground mass mining in 3.6 x 3.6 m or larger production drifts. It is capable of drilling vertical and inclined fans and single or parallel Ø64 to 115 mm longholes up to 54 meters in depth, using T38, T45 and T51 MF-rods or Ø65 mm/T45, ST58 and ST68 tube rods.

The drill is mounted on a 4-wheel drive frame-steered and diesel-powered carrier. It is equipped with the HL1560ST hydraulic rock drill, LFRC1600 drilling module, ZR30 telescopic boom, TAS drilling control system and FOPS / ROPS operator's safety cabin for high drilling capacity and maximum uptime.

The 360° drilling module rotation and wide boom swing and tilt angles make the unit suitable for most mining methods and various service support applications.

The CANbus based TAS drilling control system with the user-friendly operating interface and various instrumentation and automation levels allow maximum productivity and good drilling accuracy.

The layout of the NC7W carrier is designed for a good visibility and stability, ensuring safe tramming in narrow mine drifts.

The operating and maintenance interface are designed for easy access, safe operation and all service points are accessible from the ground level.



Key features

Hydraulic rock drill	HL1560ST (33 kW)
Drilling module	LFRC1600 (29 + 1 rods)
Rod length	4' - 6' (1 220 - 1 830 mm)
Boom	ZR30
Minimum drift size (H x W)	3.6 m x 3.6 m
Minimum drift width in T-section	4 000 mm
Pivot point height	2 100 - 2 665 mm
Boom coverage (vertical holes)	3 000 mm
Transport height (with cabin)	3 250 - 3 700 mm
Transport width	2 290 mm
Transport length	11 250 mm
Transport weight	22 000 kg

Main benefits

Productivity

Sandvik DL421 offers a high productivity level, thanks to a field proven rock drill with high percussion power, a fast and accurate rod handler and a stable telescopic boom with wide swing and tilt angles.

Hole accuracy

High drilling hole accuracy in longhole drilling is achieved thanks to the high boom stability and heavy duty drilling module.

Product safety

Sandvik DL421 is equipped with a FOPS/ROPS operator's safety cabin or FOPS/ROPS canopy for good visibility and safe operations.

During drilling, the mechanized rod handling, fan automation and teleremote operation (option) improve operator safety and performance.



360° drilling module rotation

With 360° drilling module rotation and wide tilt angle, DL421 offers good usability in a wide variety of drilling applications.



Drilling accuracy

Instrumentation and automation provide accurate drilling data for maximum accuracy and performance.



Safe working environment

The carrier is designed for good visibility and stability, ensuring safe tramming in mine drifts. The FOPS/ROPS cabin or FOPS canopy (option), protect the operator from hazards.



Sandvik 365 Parts and Services

Proudly keeping you on track!

Sandvik 365 Parts & Services offer a variety of possibilities to enhance your Sandvik DL421 drill's performance performance. As an OEM, we provide the best-suited choices to preserve your machine's high performance throughout its lifetime.

These consist of highly skilled service specialists supporting you 365 days a year, all using Sandvik Genuine parts and components complemented by a range of robust tools.

In addition, you get to enjoy the benefits of advanced digital services and a global infrastructure dedicated to keeping your Sandvik fleet on track.

Technical Specification

Rock tools and hole length

Rod and hole diameter			*Hole length (m)	Rock drill
Thread	Rod Ø (mm)	Hole Ø (mm)		
T38	39 (rods)	64	37 ... 54	HL820ST
T45	46 (rods)	76		HL820ST
T45	65 (tube)	76 - 89		HL820ST, RD925M
T51	52 (rods)	89		HL820ST, RD927L
ST58	76 (tube)	89 - 102		RD927L, HL1560ST
ST68	87 (tube)	102 - 115		HL1560ST

**) Feed in contact with rock, front stinger retracted*

Hydraulic rock drill

Type of rock drill	HL1560ST (TS2-319)
Percussion power	33 kW
Percussion pressure	Up to 200 bar
Percussion rate	40 - 40 Hz
Stabilizer	Sleeve type
Rotation speed	0 - 100 rpm (OMT500)
Rotation torque	2 330 Nm (OMT500)
Weight	490 kg
Length with shank adapter	1 505 mm

Drilling module

Type of drilling module	LFRC1600 (TS2-342)
Rod length	1 220 - 1 830 mm (4' - 6')
Storing capacity	29 + 1 rods (all threads)
Retaining centralizer	Pito 16
Cuttings diverter	CC1016
Set-off from stope face	2 055 mm (minimum)
Feed force	31 kN
Feed and return speed	Up to 0.3 m/s (fast feed)

Drilling module dimensions

Type	LFRC1606 (Standard)	LFRC1605 (Option)	LFRC1604 (Option)
Rod / tube length	6' (1 830 mm)	5' (1 525 mm)	4' (1 220 mm)
Total feed length*	3 970 mm	3 665 mm	3 360 mm

**) Add 60 mm for bit changer*

Longhole boom

Telescopic boom	ZR30 (TS2-288)
Boom support type	Frame (horseshoe)
Boom swing	Left 44° / Right 44°
Boom (fan) tilt (std horseshoe) (long horseshoe)	Back 22° / Forward 53° Back 30° / Forward 53°
Drilling module roll-over	360°
Boom extension	565 mm
Drilling module travel	1 400 mm (6'), 1 100 mm (5'), 1 000 mm (4')
Boom coverage (vertical holes)	3 000 mm
Pivot point height (boom vertical)	2 100 - 2 665 mm
Front and rear stingers	Mounted on the drilling module
Rear stinger extension	1 500 mm (4'), 1 700 mm (5' and 6')
Front stinger extension	1 700 mm (4'), 2 000 mm (5' and 6')

Hydraulic system

Type of hydraulic system	TPC LH
Operating principle	Electric pilot control
Powerpack	HPP1590 (1 x 90 kW)
Filtration size (pressure / return)	20 µ / 10 µ
Oil tank volume	270 liters
Cooler for hydraulic oil	OW45 oil-to-water (45 kW)
Low oil level indication	Low oil level switch

Drilling control system

Type of control system	TAS
Operating principle	CANbus
Control panel	In safety cabin or canopy
Adjustable parameters	Full percussion Collaring Rotation / Threading Feed / Anti-jamming Flushing
Rotation pressure controlled feed	With One-hole / Fan automation
Diagnostics system	Interactive
OptiMine®	With configuration readiness

Electric system

Standard voltages	380-690 V (50 or 60 Hz)
Total installed power	119 kW
Main switch gear	MSE 10
IP-classification	Specification TS2-132
Allowed voltage fluctuation	± 10%
Starting method	Star-Delta (380 - 690 V) Soft starter (575 V)
Automatic cable reel	TCR4E
Cable reel remote control	At operator station and cable reel
Front and rear lights (combined working and driving)	10 x 50 W (24 V) LED
Carrier positioning lights	2 x Laser type
Rear parking / brake lights	2 x Red LED (24V)
Stair and service lights	LED (24V)
Sealed AGM batteries	2 x 12 V (145 Ah)

Air and water flushing system

Flushing of holes	By Water
Water booster pump type	WBP3
Water pump capacity	215 l/min
Water pump inlet pressure	2 -7 bar
Flushing water pressure	10 - 20 bar
Shank lubrication device	SLU1 (air / oil mist)
Air compressor	CTN10 (1.0 m^3/min at 7 bar)
Air cleaner for external air supply	IP5 and connection
Rock drill oil consumption	200 - 500 g/h
Rock drill air consumption	300 - 400 l/min

Operator's safety cabin

Cabin certification	FOPS / ROPS (ISO3449 / 3471)
Type of cabin	Standard height
Unit height in tramming	3 050 mm
Cabin inside height	1 700 mm
Sound pressure level EN791	Cabin < 80 dB(A) Emitted 127 dB(A)
Operator's seat	Ergonomic T-back seat
Air conditioning system	For drilling and tramming
Cabin safety grill	For front screen
Audio system	CD / MP3-player, radio and loudspeakers
Cabin boot washer	At cabin entrance

Technical Specification

Carrier

Type of carrier	NC7W (frame-steered)
Carrier articulation	± 40°
Rear axle oscillation	± 8°
Ground clearance	420 mm
Diesel engine	QSB4.5, 124 kW, Stage IIIA
Exhaust catalyzer	Standard
Transmission	Hydrodynamic, Spicer T20 000
Axles	Spicer
Tires	14.00 - 24
Brakes	SAHR fail safe wet disc brakes
Parking / emergency brakes	SAHR type, fail safe wet disc brakes
Tramming speed	Horizontal (0%): 15 km/h 8°=1:7=14%: 5 km/h
Gradeability / sideways tilt	Max. 15° / 5°
Carrier stabilization	Front (horseshoe) stabilizer 2 x TJ60 jacks (rear)
Fuel tank	140 liters
Hand throttle	Standard
Filling pump for hydraulic oil	Electric
Hand held fire extinguisher	1 x 7.7 or 9 kg (type ABC)
Centralized greasing points	Specification TS2-463
Tramming alarm	Standard
Tramming cameras	Front, rear and side
Knowledge Box™	Connectivity solution (TS2-535)
Colour scheme	Sandvik standard
Documentation	1 x Operator's manual 1 x Maintenance manual 1 x Technical manual English only) 1 x Parts manual (English only) 2 x Toolman USB key

Optional features and packages

Hydraulic rock drill	
*HL710S rock drill	With 55 kW or 90kW powerpack
*HL820ST rock drill	With 90 kW powerpack
*RD927L rock drill	With 90 kW powerpack
*RD925M rock drill	With 90 kW powerpack
*Power extractor	HL1560ST, HL820ST, HL710S, RD927L
Drilling module	
Spare remote control panel	For offboard use
Horizontal zoom on ZR30	TS2-298
Long front frame	±45° feed tilt an longer feed cradle
Conversion kit	From one rod/tube size to another
Bit changer	For LFRC1600 drilling module
Tube rod manipulator	For cabin units
Rear stinger extension kit	820 mm
Hydraulic system	
*Oil-to-air cooler for hydraulic oil	2 x OA30 (30 kW)
Vacuum pump	For hydraulic oil
Instrumentation	
Access detector, or protector	Mandatory in Europe (TS2-211)
Drilling instrument	TMS for DL400 series (TS2-122)
Spirit level angle indicators	3 pcs (on boom and feed)
Automation	
One-hole automation (incl. TMS)	Specification TS2-198
Teleremote drilling	WLAN or LTE, including Data transfer
Fan automation (incl. TMS)	Specification TS2-199
Data transfer USB/WLAN (incl. DrillConnect mobile app)	Connectivity through Knowledge box™ for easy data transfer to and from the rig

Optional features and packages

Cleaning system	
Low pressure system with reel	Up to 15 bar (TS2-343)
High pressure system with reel	Up to 220 bar (TS2-343)
Greasing systems	
Automatic system	Lincoln (for carrier, boom and rod handler)
Manual system	Pump reel and nozzle (TS2-463)
Electric system	
*Voltage option	1 000 V (50 or 60 Hz) and DOL starter
Dewatering pump outlet readiness	Site voltage 380 - 1 000V (8 kW)
Electric cables	Specification TS2-121
Ground fault and overcurrent unit	VYK
Outlet (single-phase) on carrier	110 V (15A / 1.6 kW)
Outlet (single-phase) on carrier	230 V (16A / 2 kW)
Remote working lights	Joystick controlled
Amber flashing light	LED (24 V)
Boom movement prevention	Switch and indicators lights
Battery jump start	CAT
Air and water system	
*Air compressor	CT28 (2.8 m³/min, 18.5 kW)
Air mist flushing kit	For external air and water supply
Compressed air outlet	Quick coupling for pneumatic tools
1 x 60 liters air receiver	For end-of-hole flushing (requires CT28)
*Harsh water resistant water circuit	For basic and advanced packages
Water hose reel and hose	THR and Ø38 mm hose (lg: 65 m)
Operator's safety cabin or canopy	
*Stainless steel cabin	FOPS (ISO 3449)
*Safety canopy and safety grill	FOPS (ISO 3449)
Cabin heating system	For drilling and tramming
Fire suppression system	
Spare hand held extinguisher	7.7 or 9 kg (type ABC)
Automatic system	Sandvik Eclipse™ (TS2-461)
Manual or automatic system	6 nozzles, Ansul (TS2-460)
Carrier	
*Diesel engine	B4.5, 129 kW, Stage V F3.8, 115 kW, China IV
Reduced tramming speed	3 rd gear lockout
*Foam filled tires	4 pcs
Fast filling and evacuation system	Wiggins (complete)
Wheel chocks and holders	2 Sets
Speedometer	For NC7/NC7W carrier
Extra items	
Spare rock drill	HL1560ST, HL820ST, HL710S RD927L or RD925M
Spare wheel assembly	Standard or foam filled tires
Special tools for rock drill	Field kit or complete set
Documentation	Extra manuals
Warranty extension	One year (excl. Kazakhstan)
Package: Country specific options	AUS, IND, EUR, CAN and USA
Package: Harsh water	Basic or Advanced (TS2-049)
Package: Onboard air and water supply	Specification TS2-328

**) Replaces standard feature*

Mimimum production drift size*

		H	W	WP	HR
LFRC1604	mm	3 560	3 560	1 750	2 100
LFRC1605	mm	3 865	3 865	2 050	2 100
LFRC1606	mm	4 170	4 170	2 350	2 100

**) 100 mm clearance*

Maximum production drift size**

		H	W	WP	HR
LFRC1604	mm	4 050	4 800	3 000	2 100
LFRC1605	mm	4 370	5 100	3 000	2 100
LFRC1606	mm	4 670	5 400	3 000	2 100

***) Rear stinger extended, front stinger retracted*

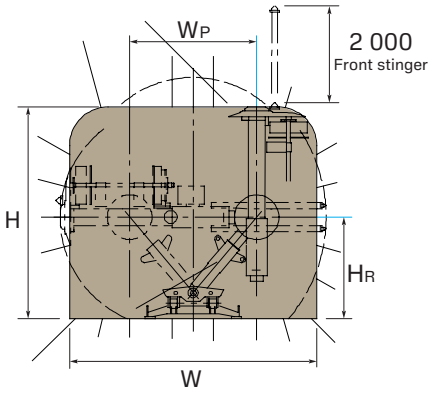

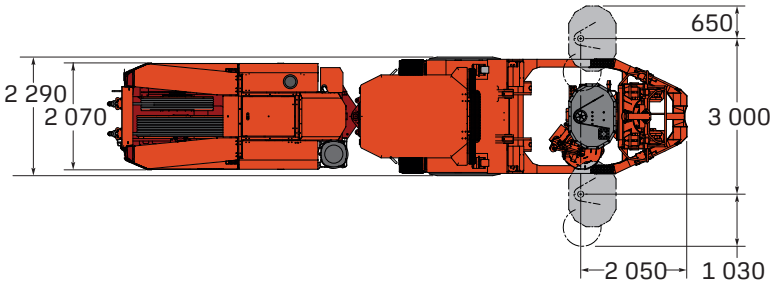

		LF1604	LF1605	LF1606
Length (LF)	mm	3 360	3 665	3 970
Height (HF)	mm	3 250	3 450	3 700
External radius (R1)	mm	6 800	6 900	7 000
Internal radius (R2)	mm	3 350	3 150	3 050
Cornering (C)	mm	4 100	4 300	4 500

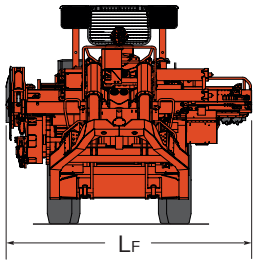

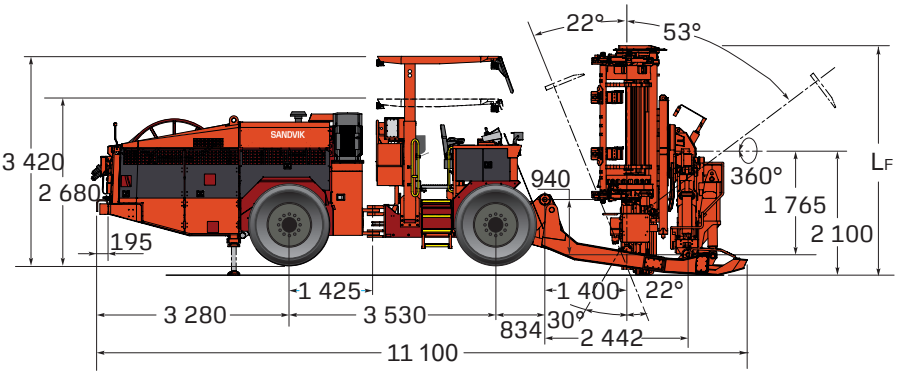

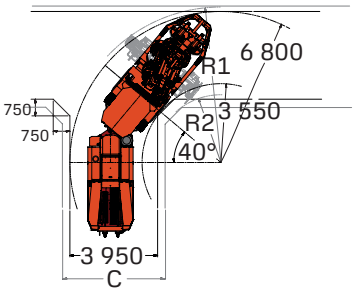

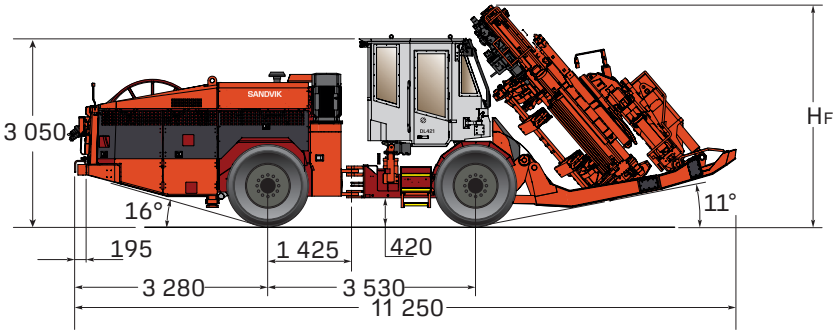

All dimensions in mm

SANDVIK

TS2-273:10ENG©Sandvik Mining 2025
SANDVIK , iSURE® and DIGITAL DRILLER™ are trademarks owned by the Sandvik group of companies.

*Test results and calculations are to be considered as results reached under certain and controlled conditions. These test results and calculations should not be treated as specifications and Sandvik does not guarantee, warrant or represent the outcome of test results or calculations in any or all circumstances.