SANDVIK

DL311 top hammer Longhole drill

Technical Specification



mining.sandvik



Longhole drill in medium section

Key features	
Hydraulic rock drill	1x HL820ST (21 kW)
Drilling module	1 x LFRC700 (20+1 rods)
Rod length	4' - 6' (1 220 - 1 830 mm)
Boom	1 x ZR20 (on front stabilizer)
Minimum drift size (H x W)	3 150 x 3 150 mm
T-section width in turning	3.2 mm (minimum)
Pivot point height	1 615 - 2 100 mm
Boom coverage (vertical holes)	2 000 mm
Transport width	2 020 mm
Transport height (canopy)	2 140 mm / 3 100 mm
Transport height (cabin)	2 920 mm or 2 670 mm
Transport length	9 920 mm
Total weight	17 000 kg

Sandvik DL311 is a fully-mechanized and compact electro-hydraulic top hammer longhole drill designed for underground mass mining in 3.2 x 3.2 m or larger production drifts. It is capable of drilling vertical and inclined fans and single or parallel Ø64...89 mm longholes up to 38 meters in depth, using T38, T45 and T51 MF-rods or Ø65 mm tube rods.

The DL311 is mounted on a 4-wheel drive frame-steered and diesel-powered carrier. It is equipped with the HL820ST hydraulic rock drill, LFRC700 drilling module, ZR20 telescopic boom, TAS drilling control system, remote control panel and FOPS operator's (tramming) canopy for high drilling capacity and maximum uptime.

The 360° drilling module rotation and wide boom swing and tilt angles make the unit suitable for most mining methods and various service support applications.

The CANbus based TAS drilling control system with the user-friendly operating interface and various instrumentation and automation levels allow maximum productivity and good drilling accuracy.

The layout of the NC5 carrier is designed for good visibility and stability, ensuring safe tramming in narrow mine drifts. All service points are accessible from ground level.



Main benefits

Productivity and holes accuracy

This advanced drilling equipment is equipped with a field-proven rock drill that delivers high percussion power, ensuring efficient and reliable performance in demanding conditions. Its integrated drilling control system features rotation-controlled feed for precise and consistent drilling operations.

A fast and accurate rod handler enhances productivity by minimizing downtime, while the telescopic boom provides wide swing and tilt angles, offering excellent flexibility and reach in various working environments.

Designed for durability and performance, the machine boasts high mechanical availability, utilizing heavy-duty, field-tested components. Additionally, it supports fan automation, data transfer, and teleremote operation, enabling enhanced control, safety, and operational efficiency.

Rock tools and hole length

Type	Rod Ø (mm)	Hole Ø (mm)	Maximum hole length (m)*		
			4' rods	5' rods	6' rods
T35	39	54	25.3	31.7	38.1
T38	39	64			
T45	46	76			
T45	65 (tube)	76			
T51	52	89			

**) Feed in contact with rock and front stinger retracted*



One hole automation

This system enables automatic drilling of a single hole to a predefined depth, including the uncoupling of rods, ensuring precision and consistency. It simplifies operations and boosts productivity by offering greater control over the drilling process.



TAS drilling control system

It's an electric pilot-controlled system that enhances drilling precision and efficiency. The system incorporates load-sensing and proportional controls, ensuring quick and accurate boom movements for optimal performance.

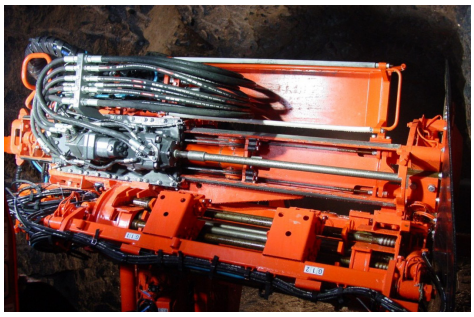

Small size drifts

The LFRC700 drilling module is designed with a minimized operating length, making it ideal for drilling in small-size drifts. Its cylinder-rope feed system is optimized for weight and compact dimensions, ensuring ease of integration and maneuverability.

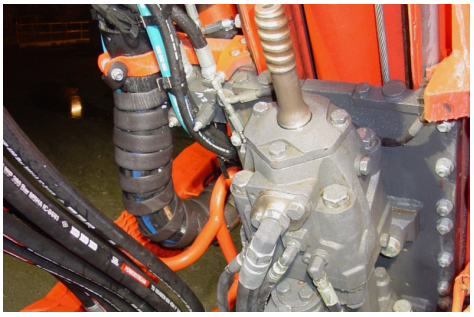

Robust and performing rock drill

The Sandvik HL820ST rock drill is designed with simplicity at their core, delivering exceptional performance and reliability while keeping operating costs low.

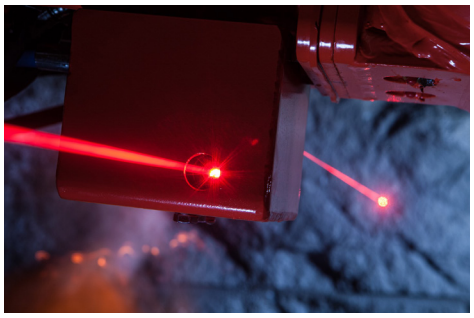

Lazers positioning

Equipped with positioning lasers mounted beneath the drilling boom, the machine can reach faster and more accurate setup in underground mining environment.



Teleremote drilling

The drilling process can be managed remotely from a safe and comfortable working environment. This system also enables the control of multiple drilling machines from a single location.



Sandvik 365 Parts and Services

Proudly keeping you on track!

Sandvik 365 Parts & Services offer a variety of possibilities to enhance your Sandvik DL311 drill's performance.

As an OEM, we provide the best-suited choices to preserve your machine's high performance throughout its lifetime.

These consist of highly skilled service specialists supporting you 365 days a year, all using Sandvik Genuine parts and components complemented by a range of robust tools.

In addition, you get to enjoy the benefits of advanced digital services and a global infrastructure dedicated to keeping your Sandvik fleet on track.

Technical Specification

Hydraulic rock drill

Type of rock drill	HL820ST (TS2-301)
Percussion power	21 kW
Percussion pressure	Up to 200 bar
Percussion rate	42 - 52 Hz
Stabilizer	Sleeve type
Rotation speed	0 – 180 rpm (OMT200)
Rotation torque	1 095 Nm (OMT200)
Weight	260 - 305 kg
Length with shank adapter	1 241 mm

Drilling module

Drilling module type	LFRC700 (TS2-341)
Rod length	1 220 - 1 830 mm (4' - 6')
Storing capacity	20 + 1 rods (all threads)
Retaining centralizer	Pito 7
Cuttings diverter	CC705
Set-off from stope face	1 950 mm (minimum)
Feed force	31 kN
Feed and return speed	0.3 m/s (fast feed)
Front stinger extension	2 000 mm

Drilling module extensions

Type	LFRC706 (Standard)	LFRC705 (Option)	LFRC704 (Option)
Rod length	6' (1 830 mm)	5' (1 525 mm)	4' (1 220 mm)
Total length	3 550 mm	3 240 mm	2 940 mm

Longhole boom

Telescopic boom	ZR20 (TS2-287)
Boom swing	Left 38° / Right 38°
Boom (fan) tilt	Back 45° / Forward 30°
Drilling module roll-over	360°
Boom extension	485 mm
Drilling module travel	985 mm (4' rods) 1 050 mm (5' rods) 1 200 mm (6' rods)
Boom coverage (vertical holes)	2 000 mm
Pivot point height (boom vertical)	1 615 - 2 100 mm
Rear stinger	Mounted on feed cradle
Rear stinger extension	1 500 mm
Laser distance from drill center	880 mm (vertical holes)

Hydraulic system

Powerpack	HPP875 (1 x 75 kW)
Filtration size (pressure / return)	20 µ / 10 µ Quick couplers for kidney filtration
Oil tank volume	180 liters (drilling)
Filling pump for hydraulic oil	Electric
Cooler for hydraulic oil	OW45 oil-to-water (1 x 45 kW)
Low oil level indication	Low level oil switch

Drilling control system

Type of control system	TAS
Operating principle	CANbus
Control panel	Portable remote panel Cable length 20 m
Adjustable parameters	Full percussion Collaring Rotation / Threading Feed / Anti-jamming Flushing
Rotation pressure controlled feed	With One-hole / Fan automation
Diagnostics system	Interactive

Electric system

Standard voltage	380 - 690 V (± 10%)
Total installed power	92 kW
Main switch gear	MSE / MSC
IP classification	Specification TS2-132
Starting method	Star Delta 380 V - 690 V
Automatic cable reel	TCR1
Cable reel control	At operator station and remote control at rear of the machine
Sealed AGM batteries	2 x 12 V, 85 Ah
Cable plug holder	On central rear hood
Front working lights (combined working and driving)	4 x 50 W LED (4 200 lm, 6 000 K)
Rear working lights (combined working and driving)	4 x 50 W LED (4 200 lm, 6 000 K)
Parking rear brake / park lights	2 x Red LED
Carrier positioning lights	2 x Laser type

Air and water flushing

Flushing of holes	By Water
Water booster pump type	WBP2 (4 kW)
Water pump capacity	100 l/min at 15 bar (input pressure = 4 bar)
Water pump inlet pressure	2 bar (min.)
Flushing water pressure	10 - 20 bar
Shank lubrication device	SLU1 (air / oil mist)
Air compressor	1 m^3/min at 7 bar
Rock drill oil consumption	200 - 300 l/min
Rock drill air consumption	250 - 550 g/h
Air cleaner for external supply	IP5 including connection

Operator's safety canopy

Canopy certification	FOPS (ISO 3449) Canopy height in tramming : 2 830 mm
Operation	Standing drilling, seated tramming
Sound pressure level according to EN 16228	Operator station: <97 dB(A) Emitted 115 dB(A)
Operator's seat	Ergonomic T-back seat
Tramming cameras	1 x rear frame 2 x on each side of cabin or canopy

Technical Specification

Carrier

Type of carrier	NC5-17
Steering system	Frame steering
Carrier articulation	Up to ± 40°
Rear axle oscillation	± 10°
Ground clearance	320 mm
Diesel engine	Deutz TCD2012, 78 kW, Tier 3, Stage IIIA, Canmet, China 2
Exhaust catalyzer	Standard
Transmission	Hydrostatic, automotive
Axles	Spicer 112 (front) and 123 (rear) with extended differential breathers
Tires	12.00-20
Service brakes	Hydrostatic and positive braking
Parking and emergency brakes	SAHR fail safe type wet disc brakes
Tramming speed	12 km/h (horizontal) 5 km/h (14%=1:7=8°)
Gradeability / sideways tilt	Max. 15° / 5° (according to ISO 18758)
Fuel tank	80 liters
Tramming oil tank	55 liters
Carrier stabilization	2 x Telescopic (front) 2 x Vertical (rear)
Hand held fire extinguisher	7.7 or 9 kg (type ABC)
Brake release	Manual hand pump
Tramming alarm	Backward alarm
Knowledge Box™	Connectivity solution (TS2-535) My Sandvik insight readiness (TS2-390)
Documentation	1 x Operator's manual 1 x Maintenance manual 1 x Technical manual (in English only) 1 x Parts manual (in English only) 2 x USB key of manuals (PDF files) 1 x Online Parts manuals (MySandvik)

Optional features and packages

Rock drill	
*HL710S rock drill	With 55 kW or 75 kW power pack
Power extractor	For HL820ST and HL710S
Drilling module	
*Drilling module sideways swing	ZR32P boom (TS2-289)
Drilling module wear parts kit	For alternative tools
Drilling control system	
Access detector or protector	Mandatory in Europe (TS2-211)
Drilling instrument TMS	For DL300-series (TS2-122)
Spirit level angle indicators	2 pcs (on feed and boom)
Teleremote drilling operation	Including data transfer (USB/WLAN
Automation	
Rod handler sequence control	Specification TS2-197
One-hole automation	Including TMS DDS (TS2-198)
Fan automation	Including TMS DDS (TS2-199)
Data transfer USB/WLAN (incl. DrillConnect mobile app)	Connectivity through Knowledge box™ for easy data transfer to and from the rig

Optional features and packages

Electric system	
*Voltage option	1 000 V (50 or 60 Hz) with DOL starter
Dewatering pump outlet readiness	Site voltage 380 - 690 V (8 kW), excluding USA/CAN
Electric cables	Specification TS2-121
Ground fault and overcurrent unit	VYK (excluding USA/CAN)
Outlet on carrier 110 V	16 A, single phase, 1.6 kW
Outlet on carrier 230 V	16 A, single phase, 2 kW
Amber flashing light	LED (24 V)
Battery jump start	CAT
Air and water system	
*Air compressor	CT28 (2.8 m^3/min, 18.5 kW)
Air mist flushing kit	For external air and water supply
Compressed air outlet	Quick coupling for hand tools
2 x 60 liters air receivers	For end-of-hole flushing (requires CT28)
Hooks and water hose	Ø38 mm hose (length 30 m)
Water hose reel and hose	THR and Ø38 mm hose (length 60 m)
Cleaning system	
HP system with reel	Up to 180 bar (TS2-343)
LP system with reel	Up to 15 bar (TS2-343)
Greasing systems	
Centralized greasing points	Specification TS2-463
Manual system	Lincoln (for carrier, boom and rod handler)
Automatic system	Carrier and boom (TS2-463)
Fire suppression system	
Spare hand held fire extinguisher	1 x 7.7 kg or 9 kg (Type ABC)
Manual or automatic system	Ansul, 6 nozzles (TS2-460)
Auto. fire suppression system	Sandvik Eclipse™ (TS2-461)
Carrier	
*Foam filled tires	4 pcs
Fast filling and evacuation system	Wiggins (complete) (TS2-448)
Wheel chocks and holders	2 sets
Speedometer	For NC5 carrier
Extra items	
Spare rock drill	HL820ST or HL710S
Spare wheel assembly	Standard or foam filled tires
Special tools for rock drill	Field kit or complete set
Warranty extension	One year (excl. Kazakhstan)
Documentation	Extra manuals
Package: Country specific options	LAM, CAN, USC, AUS, EUR
Package: Harsh water	Basic or Advanced (TS2-049)
Package: Onboard air and water supply	Specification TS2-328

**) Replaces standard feature*

Technical drawings

All dimensions in mm

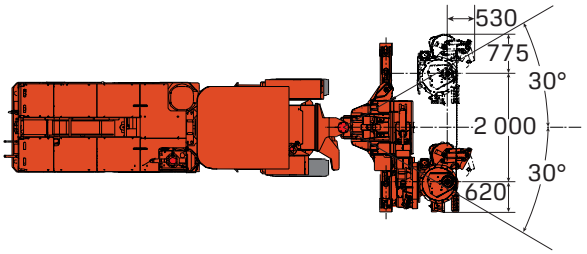

Minimum production drift size*

	H	W	WP	HR
LFRC704	3 150 mm	3 150 mm	1 460 mm	1 615 mm
LFRC705	3 450 mm	3 450 mm	1 760 mm	1 615 mm
LFRC706	3 750 mm	3 750 mm	2 000 mm	1 615 mm

**) 100 mm clearance, add 400 mm (total) for fan automation*

Maximum production drift size**

	H	W	WP	HR
LFRC704	3 700 mm	4 800 mm	2 000 mm	1 750 mm
LFRC705	4 000 mm	5 100 mm	2 000 mm	1 750 mm
LFRC706	4 150 mm	5 250 mm	2 000 mm	1 750 mm

***) Rear stinger extended; the use of drilling module mounted front stinger extends the coverage further*

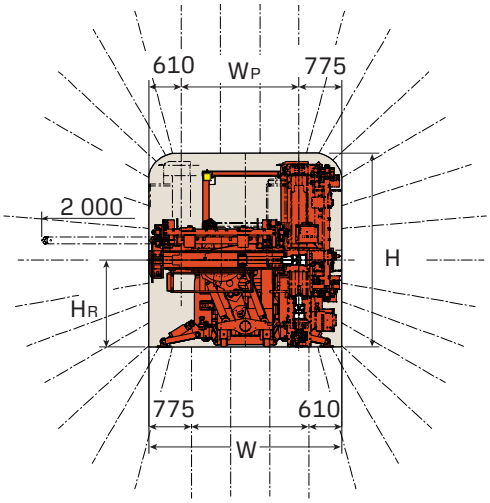

Drilling module length (LF)

	LF
LFRC704	2 940 mm
LFRC705	3 240 mm
LFRC706	3 550 mm

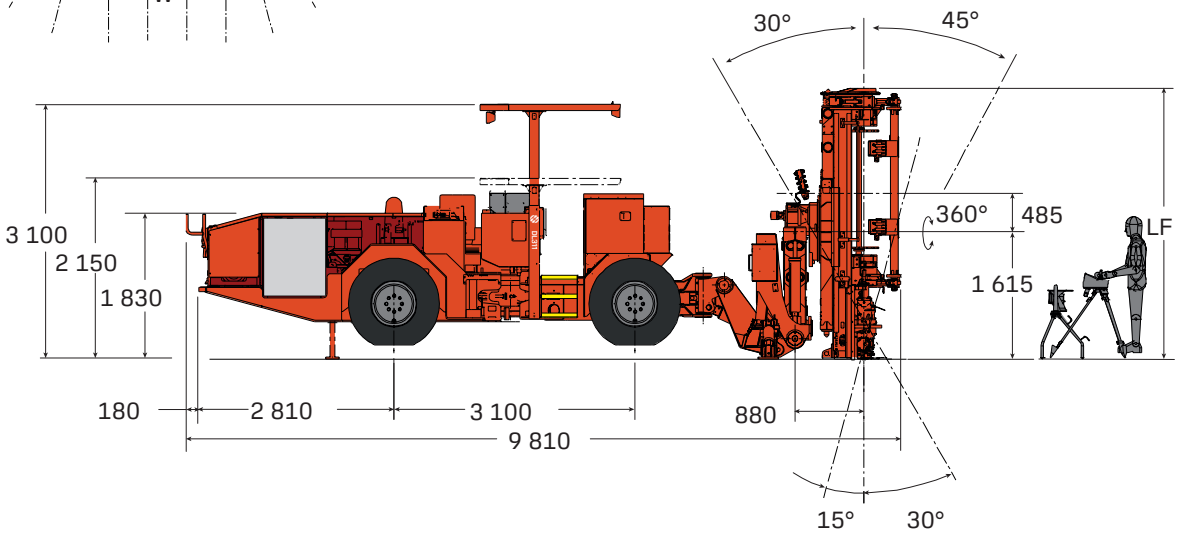

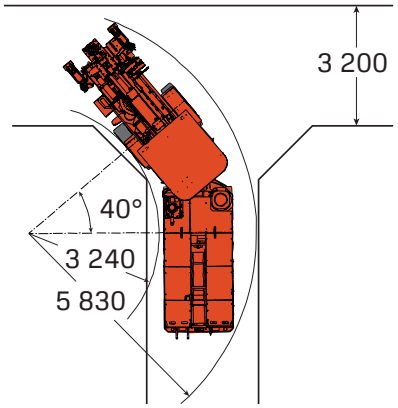

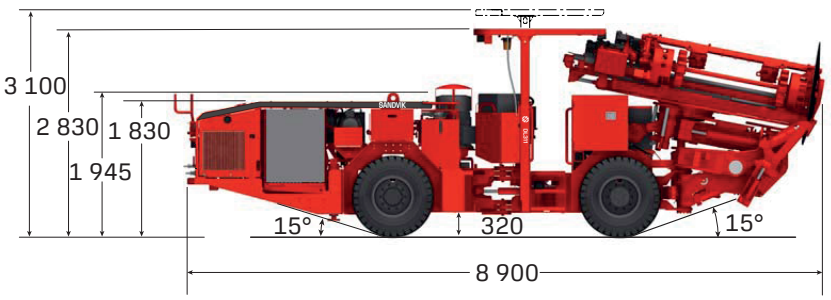



SANDVIK

TS2-243:10ENG©Sandvik Mining 2025
SANDVIK, iSURE® and DIGITAL DRILLER™ are trademarks owned by the Sandvik group of companies.

*Test results and calculations are to be considered as results reached under certain and controlled conditions. These test results and calculations should not be treated as specifications and Sandvik does not guarantee, warrant or represent the outcome of test results or calculations in any or all circumstances.