SANDVIK

DS422iE
Cable bolter

Technical Specification



mining.sandvik



Cable bolting with zero emissions

Sandvik DS422iE is a rock reinforcement drill rig specialized for cement grouted cable-bolt installation in underground mines and tunnels.

Sandvik DS422iE uses electric battery power instead of a diesel engine to eliminate emissions during tramming. Thanks to its revolutionary electric driveline system, our latest highly-automatic cable bolter consumes no fuel and generates less heat and noise than conventional drive-lines.

The result is safer, healthier and more productive cable bolting in your mine.

Sandvik DS422iE is capable of installing up to 25 meter long cable bolts with several steel strands per hole. The drill rig is provided with an on board automatic cement mixer, a cement silo and a steel strand reel. It is therefore autonomous for more than a shift.

The drill rod handling system has a capacity for 19 pieces of 1 ⅜” (T35) diameter, round MF drill rods. The recommended drill hole size for this application is 54 mm. However alternative hole size can be selected with advice from your local Sandvik contact. The steel strand diameter is normally 15.2 mm, of either plain steel or bulb anchor strand.

The bolting operation is performed by a single operator located away from the drilling, grouting and cable installing module (CBHi Cable Bolting Head).

Sandvik DS422iE is designed for safety. For example, most of the daily and routine checks are done with both feet on ground.

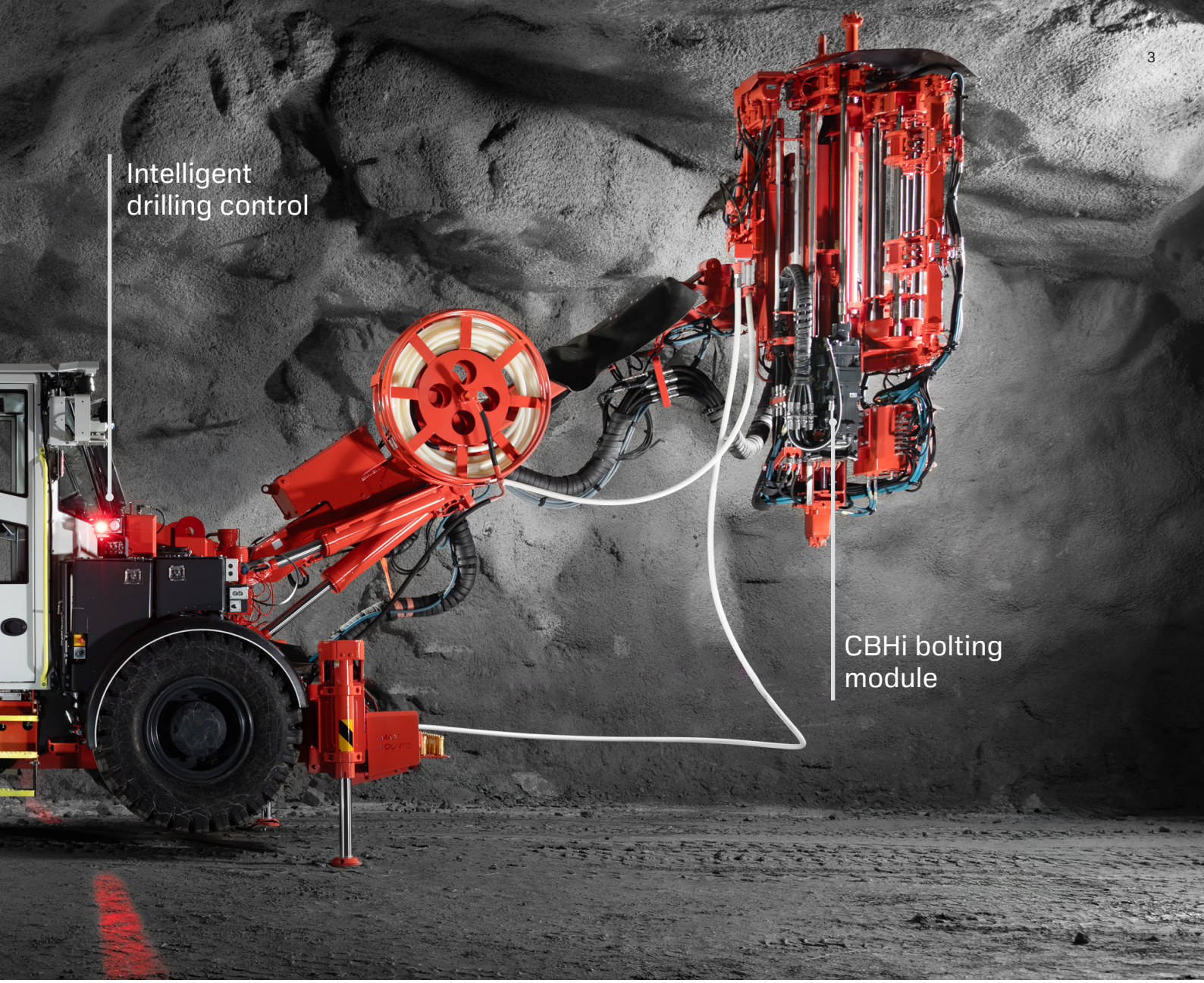

Key features	
Optimum bolting coverage	5 m x 5 m
Hydraulic rock drill	1 x RD414, 14 kW
Bolting head	1 x LFRC600i
Boom	1 x SBR60i
Automation package	Silver
Maximum hole length	38 m
Cable-bolt length	25 m
Onboard battery package	Lithium iron phosphate battery technology
Max. battery energy	121 kWh
Usable energy onboard	103 kWh (2 x 51.5 kWh)
Charging transformer	60 kVA
Tramming speed	10 km/h (flat ground) 6.0 km/h (1:7 incline)
Tramming distances	28 km (flat ground), 5.6 km (1:7 incline upwards)
Turning width (T-section)	4 785 mm
Transport / bolting width	2 790 mm / 3 620 mm
Transport height	3 260 mm
Transport / bolting length	14 765 mm / 13 870 mm
Total weight	35 000 kg depending on options

Main benefits

Fast and automated one bolt automation

Sandvik DS422iE is a cable bolter for 5 x 5 meter size headings combining a safe, ergonomic working environment with high levels of performance. The i-Class platform offers various levels of automation for rock support drilling.

The high level of data collection during bolting allows to better know how drifts and tunnels are supported with possibility to document it.

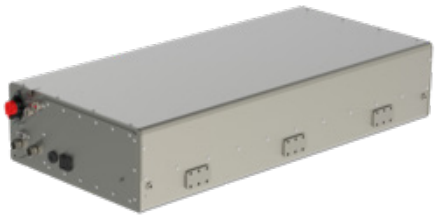

Increased performance through safest technology
LFP batteries are certified for underground mining applications for maximum safety. Excellent tramming performance and short charging time.



DS422iE Digital Driller

Through simulation, operators develop skills fully from basic boom movements and manual drilling to full automated drilling operations using various training scenarios.



High level of automation

With scalable automation packages, Sandvik DS422iE offers a wide range of valuable features for automatic cable bolting:

• Near hole automation
Aligns the drilling module automatically when the next hole is close enough
• Aim to bottom
Keeps the end point of the hole in the same location, if the collaring point location is changed.

• Enables advanced mine automation and future tele-remote solutions reducing the need for manual tasks. It allows integration with our digital offering like iSURE®, MySandvik Remote Monitoring Service, Newtrax MDP and AutoMine®.



Better visibility and operator environment

Sandvik DS422iE is equipped with modern ergonomic and tiltable (option) cabin. It offers better visibility, good noise isolation and better vibration absorption.

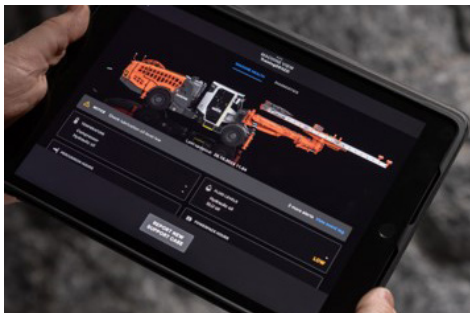

Sandvik DrillConnect

Readiness for Sandvik DrillConnect mobile application for improved data management and enhanced maintenance, and My Sandvik digital services.



Sandvik 365 Parts and Services

Proudly keeping you on track!

Sandvik 365 Parts & Services offer a variety of possibilities to enhance your Sandvik DS422iE cable bolter's performance. As an OEM, we provide the best-suited choices to preserve your machine's high performance throughout its lifetime.

These consist of highly skilled service specialists supporting you 365 days a year, all using Sandvik Genuine parts and components complemented by a range of robust tools.

In addition, you get to enjoy the benefits of advanced digital services and a global infrastructure dedicated to keeping your Sandvik fleet on track.

Technical Specification

Hydraulic rock drill

Type of rock drill	RD414 (TS2-178)
Percussion power	14 kW
Percussion pressure	Max. 220 bar
Percussion rate	78 Hz
Stabilizer	Sleeve type
Rotation speed	Max. 300 rpm (with OMS160)
Rotation torque	570 Nm (with OMS160)
Hole size (bolting)	54 - 57 mm
Recommended rod	T35
Shank adapter	T35 (male)
Weight	180 kg

Cable bolting head

Type of bolting head	LFRC600i
Bolting head length	4', 5', 6'
Rod handling system	RC604, 5 or 6 , 19 + 1 rods
Centralizer	Pito 11LH
Total length	3 190 - 3 800 mm
Net weight	2 150 kg

Grouting and cabling system

Cement mixer	TCM200i (incl. cement dust collector)
Cement pump	TP8
Cement hose reel	35 m capacity
Cement silo	600 kg
Steel strand reel	
Steel strand feeding unit	

Boom

Type of boom	SBR60i (TS2-478)
Boom extension	1 200 mm
Boom weight, net	2 200 kg
Roll-over angle	358°

Hydraulic system

Powerpack	160 kW (tramming and drilling)
Filtration size (pressure / return)	20 µ / 10 µ
Oil tank volume	270 liters
Oil tank filling pump	Electric
Cooler for hydraulic oil	OW30 oil-to-water (2 x 30 kW)

Drilling control system

Type of control system	SICA
Drilling control modes	Intelligent torque control / Feed percussion / manual
Upgradeable automation levels	
Electronic joystick controls	
15" full color touch screen	
Cable kit for spare part programming	
Safety lock for movement prevention	2 switches

Electric system

Multivoltage	Compliant from 380 to 1 000 V, 50 and 60 Hz
Total installed power	205 kW
Main switch gear	MSE10
IP classification	Specification TS2-132
Starting method	Inverter controlled soft starting Typical inrush current peak less than 1 kA (duration less than 20ms)
Automatic cable reel	TCR4CE with spooling system
Cable reel control	Operator station and remote control at rear machine)
Front lights	6 x 50 W LED (24V) >125lx, 20 000 lm; 6 000 k
Rear lights	2 x 50 W LED (24V) and 2 x 17 W LED (24V) 8 000 lm; 6 000 k
Remoted search light	1 x 50 W LED (24V)
Parking rear brake / park lights	2 x Red LED
Stair and service lights	LED (24 V)
Amber flashing light	LED (24 V)
Electric quality monitoring	Voltage, Amperage, Power, Pf Energy, Phase-sequence
Onboard battery package	2 x Lithium iron phosphate battery 121 kWh max. energy
Intelligent power management system	Battery charging during drilling, Presettable power compensation available from the batteries during peak loads in drilling
Protection	MSE IP66/Nema4x, junction boxes ≥ IP68

Air and water flushing

Flushing of holes	By Water
Water booster pump type	WBP2
Water pump capacity	100 l/min
Water pump inlet pressure	2 bar (Min.)
Flushing water pressure	10 - 15 bar
Shank lubrication device	SLU-1 (Air / oil mist)
Air compressor	CTN10 (1.0 m^3/min at 7 bar)
Oil consumption	150 - 250 g/h
Air consumption	250 - 350 l/min
Compressed air outlet	Quick coupling

Operator's safety cabin

Safety cabin certification	FOPS / ROPS (ISO 3449 / 3471)
Operation	Seated tramming Standing and seated drilling
Sound pressure level	According to EN791, ISO4872, ISO1120 Operator station: 69 db(A)
Vibration level	According to EN791, ISO2631-1
Seat	Fully adjustable seat (tramming and drilling)
Optimized dust level control via air circulation	
Air conditioning	EU6/7 filtering capacity
Cabin heating	During tramming and drilling
Electricity outlets	1 x 12 V and MP3 player readiness
Stairs and indoors lights	LED
Audio player	MP3 player with radio and loudspeakers
Boot washer	At each cabin entrance
Safety laminated acoustic windows	

Technical Specification

Carrier

Type of carrier	C400E (frame-steered)
Carrier articulation	± 35°
Rear axle oscillation	± 8°
Ground clearance	330 mm
Transmission	Inverter controlled electric motor with mechanical link to axles
Axles	Dana Spicer
Tires	14.00–24 PR28 foam filled
Brakes	SAHR type, fail-safe wet disc brakes
Tramming speed	10 km/h (flat ground) 6.0 km/h (1:7 incline)
Tramming distances	28 km (flat ground), 5.6 km (1:7 incline upwards)
Gradeability / sideways tilt	Max.15° / 5° (according to EN 16228-2)
Hydraulic jacks	2 x SJ500 (front) 2 x SJ600 (rear)
Wheel chocks and holders	2 Sets
Centralized greasing points	Specification TS2-463
Manual greasing system	Specification TS2-463
Hand held fire extinguisher	1 x 7.7 or 9 kg (type ABC)
Tramming cameras	Rear and side
Tramming alarm	Standard
Toolboxes and first aid kit	
Knowledge Box™	Connectivity solution (TS2-535)
Color scheme	Sandvik
Documentation	2 x Operator's manual 2 x Maintenance manual 2 x Technical manual (in English only) 2 x Parts manual (in English only) 2 x Toolman USB key

Optional features and packages

Rock drill	
*HL710S rock drill	With T35 - T45 (male) shank
Cable bolting head	
Bolting head oiler	BC and BCS system (TS2-291)
Front stinger	
Cement transfer screw	
Hydraulic system	
Vacuum pump	For hydraulic system
By pass oil filter	
Drilling control system	
Access detector, or protector	Mandatory in Europe (TS2-211)
Air and water system	
*Air compressor	CT28 (2.8 m³/min, at 7 bar)
Compressed air outlet	Quick coupling
Water hose reel and hose	THR2.5E with Ø38 mm (1 ½"), 65 m
Cleaning system	
LP system with reel	Up to 15 bar (TS2-343)
HP system with reel	Up to 180 bar (TS2-343)
Bolting module continuous washing system	Remote controlled
Greasing systems	
Manual system	Specification TS2-463
Automatic system	Lincoln (complete)
Electric system	
*Option voltage	1 000 V (50 / 60 Hz) with DOL starter
*Electric cables	Specification TS2-121
Ground fault and overcurrent protection	VYK (excluding CAN/USA)
Dewatering pump outlet	8 kW, Site voltage 380 - 690 V
Multivoltage basic	380 – 440 V, 690 V 50 or 60 Hz
Multivoltage pro	380 – 1 000 V, 50 or 60 Hz
Current draw reducer unit	
Remote controlled spot lights	2 pcs
Indicator lights for jacks	Up and down
Earth continuity control	1 wire pilot circuit with remote reset / disconnect
Auxiliary outlet	1 x 110 V or 1 x 230 V, 16 A
Battery jump start	Optional
Indicator light for boom movement prevention switch status	2 x on both sides, 1 x inside cabin (green or red depending status)
Operator's safety cabin	
*Low height cabin	FOPS/ROPS (ISO 3449/3471) height 2 900 mm
Tilting system	Max. 15° (+ 100 mm total height)
Safety grill	Lifting mechanism (400i-class)
Fire suppression system	
Spare hand held fire extinguisher	1 x 7.7 or 9 kg (type ABC)
Manual or automatic system	Ansul, 6 nozzles (TS2-460)
Carrier	
Fast filling system	Complete
Wheel chocks and holders	2 pcs
Rod rack (max. load 400 kg)	Front of carrier
Extra items	
Spare rock drill	RD414, HL710
Spare wheel assembly	Foam filled tire
Warranty extension	One year (excl. Kazakhstan)
Special tools for rock drill	Field kit (TS2-181) Complete set (TS2-180)
Spare batteries	2 x LFP battery (purchased or rental)
Documentation	Extra, Catbase, Link one manuals
Packages: Automation	Gold, Platinum (TS2-539)
Packages: Country	AUS, USA, CAN, EU, SAS
Package: Environmental	Specification sheet TS2-523

**) Replaces standard feature*

Technical drawings

All dimensions in mm

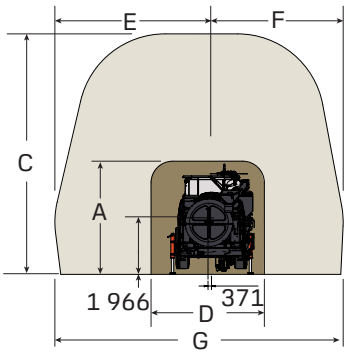

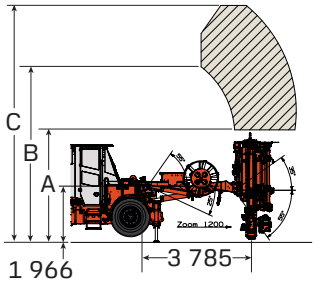

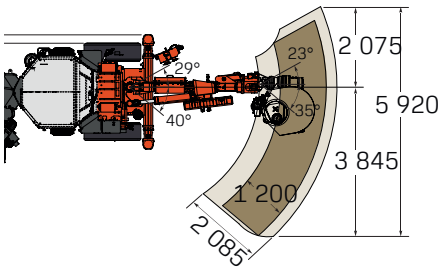

Coverage (height)

Drilling module	Minimum operating height (A)	Optimum operating height (B)	Maximum operating height (C)
CBHi6	3 935	6 138	8 284
CBHi5	3 630	5 833	7 979
CBHi4	3 325	5 928	7 713

Coverage (width)

Drilling module	Minimum operating width (D)	Left maximum width (E)	Right maximum width(F)	Maximum width (G)
CBHi6	3 935	5 438	4 572	10 010
CBHi5	3 630	5 133	4 267	9 400
CBHi4	3 325	4 867	4 001	8 868

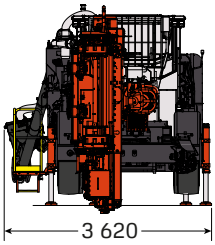

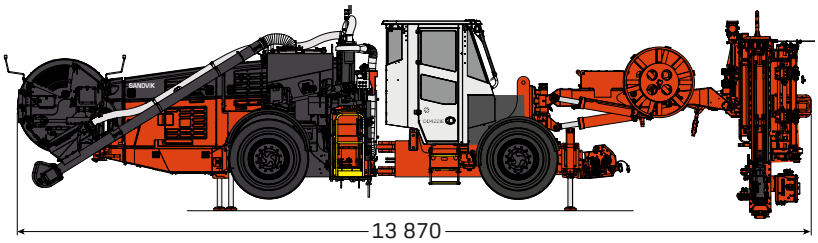

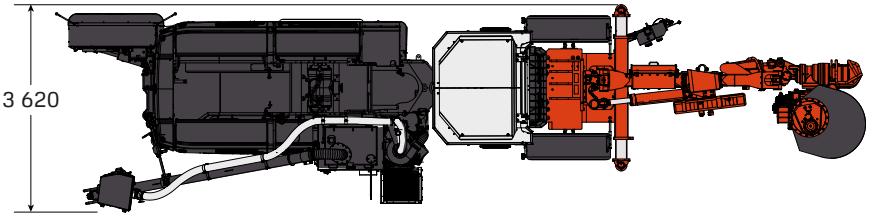

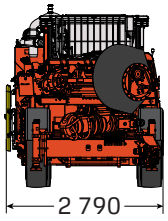

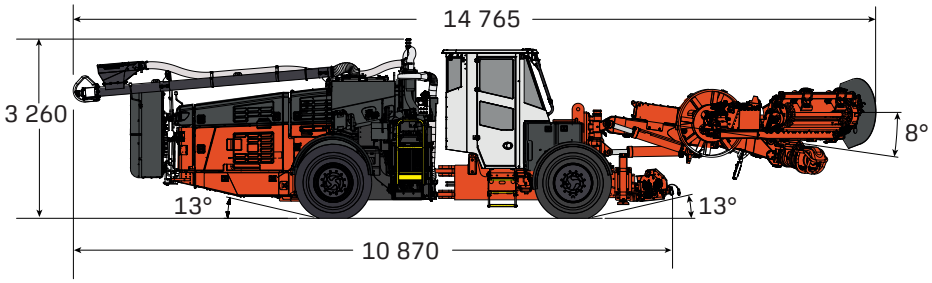

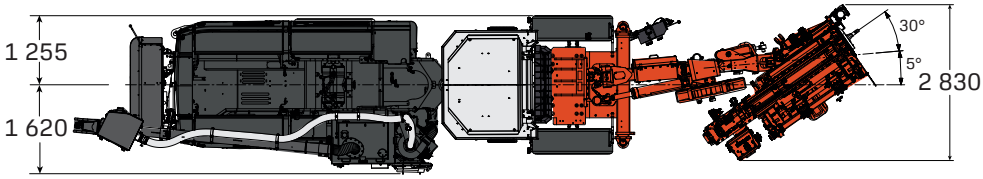

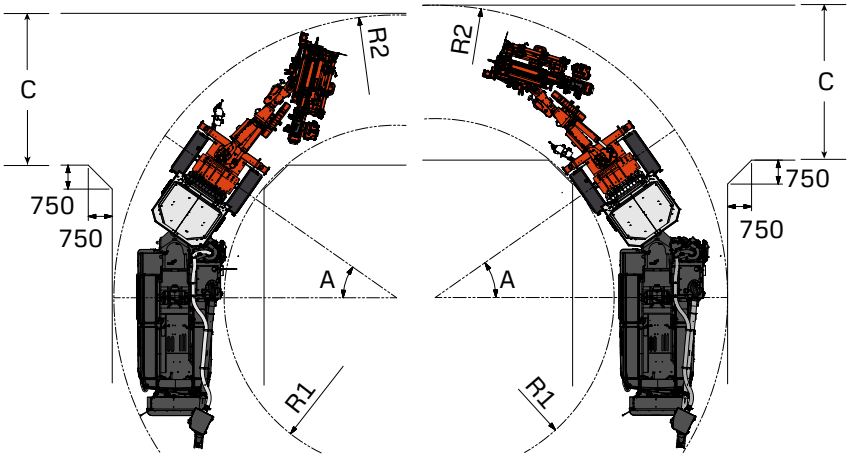

Cornering	Turning left	Turning right
Angle (A)	35°	35°
Internal radius (R1)	5 610 mm	5 440 mm
External radius (R2)	9 110 mm	8 890 mm
T-cross (C)	4 785* mm	4 690mm

**With filling screw option*

SANDVIK

TS2-518:02ENG©Sandvik Mining 2026
SANDVIK , iSURE® and DIGITAL DRILLER™ are trademarks owned by the Sandvik group of companies.

*Test results and calculations are to be considered as results reached under certain and controlled conditions. These test results and calculations should not be treated as specifications and Sandvik does not guarantee, warrant or represent the outcome of test results or calculations in any or all circumstances.