DU411

ITH longhole drill

Key features

Top drive	RH6230 with spline piston
Feed	CF706-F with fixed centralizer
Pipe arm	PA15 single axis
Pipe diameter	79 - 127 mm (Ø3⅛" - 5")
Pipe length	4' - 5' - 6' (1 220 - 1 524 - 1 830 mm)
Horizontal (single) slideover	HS130, 762 mm (30") movement
Minimum production drift size (H and W)	3 788 mm (6' feed)
Minimum RC drift size (H and W)	Min. 4 192 mm (165⅛")
Drift width in T-section	Min. 4 000 mm (157½")
Pivot point height	1 903 mm (74¹⁵⁄₁₆")
Transport height	2 724 mm (107¼")
Transport width	2 337 mm (92")
Transport length	9 357 mm (368⅜")
Transport weight	21 770 kg (48 000 lbs)

Sandvik DU411 is a highly versatile and compact ITH longhole drill fitted with an onboard booster and designed for underground mining in 4 x 4 m or larger production drifts. It is capable of drilling vertical and inclined fans, and single or parallel Ø89 – 254 mm (3½" – 10") longholes up to 100 m in depth, using 3" to 8" in-the-hole hammers and Ø79 – 127 mm (3⅛" – 5") pipes. The DU411 can be fitted with a RBH-24 head for Ø24" (610 mm) reaming in service support, or reaming up to Ø17½" (445 mm) holes with 12" hammers in rapid raising.

Additionally, it can also be used for exploratory Reverse Circulation (RC) drilling.

The DU411 is mounted on a 4-wheel drive frame-steered and diesel-powered carrier. It is equipped with the RH6230 top drive, CF706-F feed with fixed centralizer, PA15 single axis pipe arm, HS130 horizontal single slideover, ERIS drilling control panel and operator's safety canopy.

The 360° feed rotation, wide slide-over, and feed tilt angles make the unit suitable for most mining methods, various service support applications, and exploratory RC drilling. The CANbus based drilling control system and drilling instrumentation ensure good control of the drilling operation.

The layout of the Aries carrier is designed for good stability, ensuring fast and safe tramming in mine drifts. All service points are accessible from ground level.



SANDVIK

TS2-098:06/ENG/METRIC © Sandvik Mining 2025
SANDVIK is a registered trademark owned by Sandvik Intellectual Property AB in Sweden and other countries.

Rock tools and hole diameters

ITH hammer	Pipe Ø (mm)	Hole Ø (mm)	Hole (in)
3”	79 mm	89 - 102 mm	3½ - 4
4”	79 mm	115 -127 mm	4½ - 5
5”	89 mm	140 - 152 mm	5½ - 6
6”	102 mm	165 - 203 mm	6½ - 8
8”	127 mm	216 - 254 mm	8½ - 10
12”	127 mm	Up to 445*	Up to 17½
RBH-24	127 mm	610*	24”

**) By reaming*

Top drive

Type of rotation head	RH6230 with splined piston
Working pressure (rotation)	Up to 207 bar (3 000 psi)
Rotation motors	2 x ME12
Maximum torque	5 730 Nm (4 226 lb-ft)
Rotation speed	0 - 60 rpm
Weight	336 kg (739 lbs)
Length with spline piston	760 mm (30”), incl. saver sub

Feed and pipe arm

Type of feed	CF706-F
Type of pipe handler	PA15 single axis pipe arm
Pipe length (standard)	6’ (1 830 mm)
Retaining centralizer	CF10 fixed centralizer
Drill table pass through	222 mm (8¾”)
Set-off from stope face	520 mm (20½”)
Feed force	70 kN (15 700 lbs)
Feed and return speed	Up to 0.3 m/s (1 ft/s)
Cuttings diverter	DV10
Hole distance from the wall	850 mm (33½”) hose loop side 1 190 mm (46⅞”) pipe arm side

Production feed dimensions

Type	CF706 (standard)	CF705 (option)	CF704 (option)
Pipe length	6’ (1 830 mm)	5’ (1 525 mm)	4’ (1 220 mm)
Stinger extension (rear)	1 664 mm (65½”)	1 511 mm (59½”)	1 359 mm (53½”)
Stinger extension (front)	803 mm (31⅝”)	650 mm (25⅝”)	498 mm (19⅝”)
Total length	3 665 mm (144⅝”)	3 360 mm (132¼”)	3 055 mm (120¼”)

RC feed dimensions

Type	CF706 (standard)	CF705 (option)	CF704 (option)
Pipe length	6’ (1 830 mm)	5’ (1 525 mm)	4’ (1 220 mm)
Stinger extension (rear)	1 676 mm (66”)	1 524 mm (60”)	1 372 mm (54”)
Stinger extension (front)	803 mm (31⅝”)	650 mm (25⅝”)	498 mm (19⅝”)
Total length	4 071 mm (160¼”)	3 766 mm (148¼”)	3 461 mm (136¼”)

Carousel capacities

Type	PC164 (Standard)	PC215 (option)	PC324 (option)	PC324 (option)
Storage capacity	16 + 1 pipes	20 + 1 pipes	32 + 1 pipes	31 + 1 pipes
Pipe diameter	79 - 102 mm (3⅛”- 4”)	79 - 127 mm (3⅛”- 5”)	79 - 89 mm (3⅛”-3½”)	102 mm (4”)
Max. hole length (6’)	31.1 m (102’)	38.4 m (126’)	60.4 m (198’)	58.5 m (192’)
Max. hole length (5’)	25.9 m (85’)	32 m (105’)	50.3 m (165’)	48.8 m (160’)
Max. hole length (4’)	20.7 m (68’)	25.6 m (84’)	40.2 m (132’)	39 m (128’)
Hole distance from the wall	1 110 mm (43¾”)	1 275 mm (50³⁄₁₆”)	1 275 mm (50³⁄₁₆”)	1 275 mm (50³⁄₁₆”)

Longhole boom

Operating principle	Horizontal single slideover
Type of boom	HS130 (762 mm movement)
Feed tilt (back / forward)	90° / 15°
Feed roll-over	360°
Feed travel	CF706 = 1 372 mm (54”) CF705= 1 067 mm (42”) CF704= 762 mm (30”)
Pivot point height	1 903 mm (74⁵⁄₁₆”)
Laser offset from drill center	1 217 mm (47⅞”)

Hydraulic system

Power pack	HP45 (45 kW)
Hydraulic pumps	1 x 100 cm³ and 1 x 74 cm³ (60 Hz) 1 x 130 cm³ and 1 x 90 cm³ (50 Hz)
Type of pump	Variable displacement axial piston
Filtration (pressure / return)	5 / 10µ
Oil tank volume	265 liters (70 gallons)
Cooler for hydraulic oil	Shell and tube type oil-to-water cooler

Drilling control system

Type of control system	CAN (control area network)
Control panel	ERIS portable control panel
Control screen	12” (16:10) color screen
Stand for control panel	Tripod type with 15 m (50’) cable
Drilling controls	Rotation controlled feed (Accra Feed) Depth and RPM monitoring
Diagnostic system	Comprehensive and interactive
Pipe handler control interface	Standard
Hole alignment system	Digital angle indicator and 2 x alignment laser

Electrical system

Standard voltages	380 – 690 V (60 Hz)
Total installed power	145 - 201 kW (depends on booster size)
Main switch gear	MSE
Allowed voltage fluctuation	±10%
Starting method	Delta-Wye
Automatic cable reel	CRH with limit stop
Cable reel remote control	At operator station
Front and rear lights *(combined working and driving)*	6 x 50 W (24 V) LED
Indicator lights	LED (24 V)
Parking lights	LED (24 V)
Amber flashing light	LED (24 V)
Sealed AGM batteries	2 x 12 V
Safety shutdowns and alarms	Low water pressure Low compressor oil pressure High discharge air pressure Low hydraulic oil level High hydraulic oil temperature
Electric quality monitoring	Phase loss or reversal protection Motor overload protection Voltage, Amperage Earth continuity control

Air and water systems

Onboard booster	KR551
Booster capacity (6 bar inlet)	20 m³/min at 24 bar (706 CFM at 350 psi)
Type of booster	Screw
Booster electric motor	92 kW (125 hp)
Booster inlet pressure	4 - 7 bar (60 - 100 psi)
Water booster pump	Triplex piston pump
Water pump capacity	27 l/min at 48 bar (7 gpm at 700 psi)
Hammer lubrication system	HLU unit with oil level sensor
Lubrication metering capacity	0 - 4 liters / h (0 -1 gallons/h)
Lubrication tank capacity	32 liters (81/2 gallons)
Water outlet (low pressure)	Rear of the carrier

Operator's safety canopy

Canopy certification	FOPS / ROPS (ISO3449/3471)
Type of canopy	Tramming
Unit height in tramming	2 724 mm (107¼")
Operator's seat	Crosswise mounted
Tramming cameras	Front and rear

Carrier

Type of carrier	Aries (frame-steered)
Carrier articulation	± 35°
Rear axle oscillation	± 10°
Ground clearance	270 mm (10⅝")
Diesel engine	M-B OM904LA (110 kW Tier3)
Exhaust catalyzer	Standard
Transmission	Dana T14 (hydrodynamic)
Axles	Dana 113 (front and rear)
Tires	10.00-20 tires
Brakes	SAHR fail safe wet disc brakes
Tramming speed	Horizontal (0%): 8 km/h 8°=1:7=14%: 5 km/h
Powerpack tramming	For short distance (1 km/h) only Remote tramming capable
Gradeability / sideways tilt	Max. 20° (35%)
Carrier hydraulic jacks	2 x CJ16 jacks (front) 2 x CJ16 jacks (rear)
Fuel tank	114 liters
Oil tank filling pump	Electric
Wheel chocks and holders	One on each side
Centralized greasing points	Standard
Fire suppression system	Automatic, Ansul (8 nozzles)
Tramming alarm	Standard
Knowledge Box™	Connectivity solution (TS2-535)
Colour scheme	Sandvik standard
Documentation	2 x Operator's manual 2 x Maintenance manual 2 x Parts manual (in English only) 2 x USB key

Optional items

Drilling system	
*HS260 double slideover	1 524 mm (60") horizontal movements. Increases tramming height to 2 798 mm (110¹³⁄₁₆")
*Cuttings diverter	For RBH-24 blind boring
*CF706-S standard feed	With split centralizer
*CF1306-S heavy hoist feed	With split centralizer
*PA15-R single axis pipe arm	RBH-24 w/ DA101 or DA201 pipe loading
*PA25 dual axis pipe arm	Downhole w/ manual pipe loading
*PA35 triple axis pipe arm	Uphole w/ manual pipe loading

Optional items

Drilling system	
*PC215 carousel	20+1 pipes Ø3⅛"- 5" (79-127 mm)
*PC324 carousel	31+1 pipes Ø3⅛"- 4" (79-102 mm)
Carousel insert	Converts carousel to use 1ft shorter pipe
Conversion kit (with carousel)	From one pipe size to another
Conversion kit (with pipe arm)	From one pipe size to another
Remote thread lubrication	For use with RC pipe or ITH pipe in carousel
Petol chain wrench on feed	To open hammers with hydraulic cylinder Without spline breakout
RC slip plate	
Instrumentation system	
Dewatering pump outlet	Site voltage 380 - 1 000 V (8 kW) Site voltage 1 000 V, step down transformer available
**ERIS teleremote	Includes 2 x remote cameras, 1 x display and 1 x ERIS panel with stand
Office teleremote	Includes access protector, 2 x remote cameras and 1 x office control station (chair and 3 displays)
**Office and ERIS teleremote	Includes access protector, 2 x remote cameras, 1 x display, 1 x ERIS panel with stand and 1 x office control station (chair and 3 displays)
Portable angle indicator	With laser alignment
Access protector	Laser gate
Cleaning system	
High pressure washer with reel	Up to 48 bar (700 psi)
Greasing system	
Automatic system	Carrier and boom (Lincoln)
Manual greasing unit	Pump, reel and nozzle
Electric system	
*Voltage option	1 000 V (50 or 60 Hz) system
Air booster options	
*Booster upgrade to KS921 at 34 bar (500 psi)	20m³/min (720 scfm) at 60 Hz and 7 bar (100 psi) inlet or 17m³/min (600 scfm) at 50 Hz and 7 bar (100 psi) inlet
*Booster upgrade to KS1121 at 28 bar (400 psi)	30m³/min (1050 scfm) at 50 or 60 Hz and 7 bar (100 psi) inlet
*Booster upgrade to KS1121 at 34 bar (500 psi)	22m³/min (760 scfm) at 60 Hz and 6 bar (80 psi) inlet or 22m³/min (790 scfm) at 50 Hz and 7 bar (100 psi) inlet
*Booster upgrade to KS1501 at 28 bar (400 psi)	37m³/min (1300 scfm) at 50 or 60 Hz and 7 bar (100 psi) inlet
*Booster upgrade to KS1501 at 34 bar (500 psi)	28m³/min (1000 scfm) at 50 or 60 Hz and 7 bar (100 psi) inlet
Pressure reducing safety valve	For inlet pressure greater than 7 bar (100 psi)
Carrier	
Fast filling and evacuation system	For fuel, hydraulic oil, engine oil, engine coolant, screw booster oil and transmission fluid (Wiggins)
Extra items	
Harsh water advanced	Upgraded cylinders and hydraulic oil cooler with enhanced corrosion protection
Drilling package: RC	Top drive upgrade (RC swivel) Hydraulic centralizers + RC slip plate Thread, forks and dual torque system Discharge diameter 76 mm Center tube ID 64 mm (maximum)
Drilling package RBH-24	CF1306-RS (blind bore feed), split centralizer, PA15-R single axis pipe arm and RH6250 with splined piston
Spare ERIS control panel	With tripod stand and 15m (50ft) cable
Spare rotation head	RH6230 or RH6250 (for V-30)
Spare wheel assembly	Rim and tire (for standard tires)
Tools to specifications	For top drive, saver sub removal
Documentation	Extra manuals (printed and USB key)

**) Replaces standard feature*
***) Incl. one ERIS panel with stand in addition to the standard ERIS panel with stand*

Technical drawing

All dimensions in mm

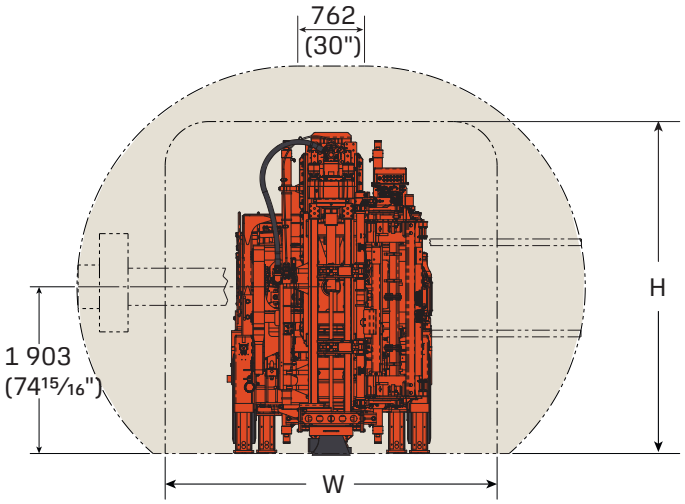

Minimum production drift size*

	H	W
CF706-F (6') standard	3 788 mm (149¼")	3 788 mm (149¼")
CF705-F (5') option	3 485 mm (137³⁄₁₆")	3 485 mm (137³⁄₁₆")
CF704-F (4') option	3 183 mm (125⁵⁄₁₆")	3 183 mm (125⁵⁄₁₆")

**) 100 mm (3¹⁵⁄₁₆") clearance. Increase drift dimensions by 406 mm (16") for RC drilling module*

Maximum production drift size**

	H	W
CF706-F (6') standard	4 422 mm (174¹⁄₁₆")	5 329 mm (209¹³⁄₁₆")
CF705-F (5') option	4 117 mm (162¹⁄₁₆")	4 871 mm (191¾")
CF704-F (4') option	3 812 mm (150¹⁄₁₆")	4 414 mm (173¾")

***) Rear stinger extended, front stinger retracted*

Minimum RC drift size (mm)***

	H	W
CF706-F (6') standard	4 192 mm (165⅛")	4 192 mm (165⅛")
CF705-F (5') option	3 889 mm (153⅛")	3 889 mm (153⅛")
CF704-F (4') option	3 586 mm (141³⁄₁₆")	3 586 mm (141³⁄₁₆")

****) 100 mm (3¹⁵⁄₁₆") clearance*

Drilling module height ****

	F
CF706-F (6') standard	3 665 mm (144⁵⁄₁₆")
CF705-F (5') option	3 360 mm (132¼")
CF704-F (4') option	3 055 mm (120¼")

*****) Increase height by 406 mm (16") for RC drilling module*

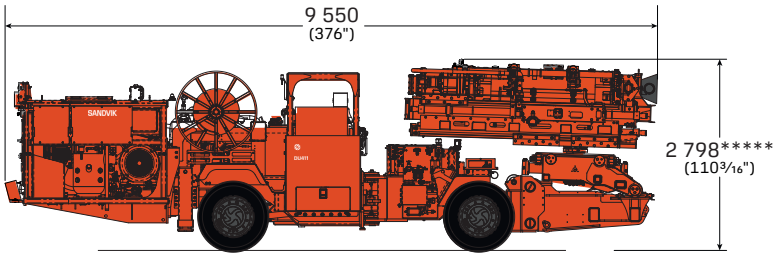

Tramming dimensions with double slideover

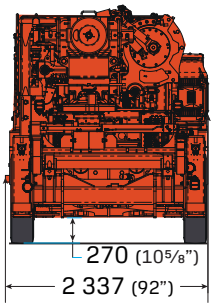

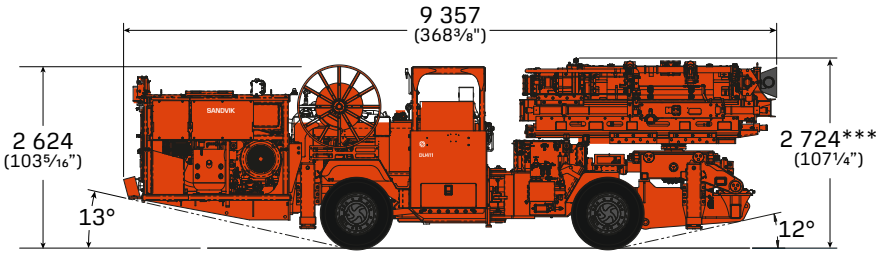

Tramming dimensions with single slideover

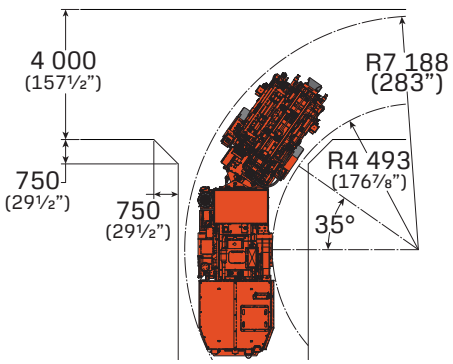

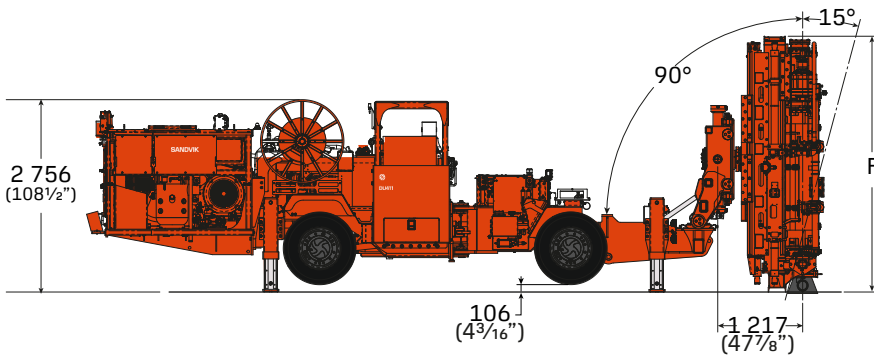

****) PC164 tramming height shown, add 105mm (4 ⅛") to tramming height for PC215/PC324 options*

SANDVIK

Sandvik Mining reserves the right to make changes to the information on this data sheet without prior notification to users. Please contact a Sandvik representative for clarification on specifications and options.