SANDVIK

DD423iE
Development drill

Technical Specification



mining.sandvik



Zero emissions, full performance underground.

Key features

Coverage	80.7 m² (W11.6 x H7.7m)
Hydraulic rock drill	RD525 (25kW)
Drill feed	TF5i, 12 - 20 ft
Boom	SB75i
Automation package	Gold (std) , Platinum (Opt)
Onboard battery package	Lithium iron phosphate battery technology
Max. battery energy	183 kWh
Usable energy onboard	155 kWh (3 x LFP batteries)
Charging transformer	120 kVA
Tramming distances	45 km (flat ground), 9.0 km (1:7 incline upwards)
Transport width	2 520 mm
Transport height	3 150 mm / 3 050 mm 2 900 mm (low cabin)
Transport length	13 485 mm
Total weight	30 000 kg depending on options

Sandvik DD423iE is the next generation of the renowned Sandvik DD422iE, designed to set a new benchmark for electric development drills. Featuring advanced LFP batteries, improved cabin visibility, and a larger boom, the DD423iE delivers enhanced performance and productivity.

This drill is powered by an electric driveline system with three LFP battery packs (155 kW) and an electric motor, providing zero emissions while tramming. This not only helps mines reduce overall emissions, ventilation requirements and fuel costs, but also contributes to a safer and healthier working environment.

The DD423iE ensures optimum tunnel profiles and dimensions in underground development, while delivering precise and repeatable drilling that minimizes waste rock. This makes your mining and development process more cost-efficient and sustainable.

Thanks to the upgraded cabin with full glass doors, operator visibility is improved, enhancing overall safety by reducing the need for the operator to leave the cabin during operation. It also enables continuous drilling, eliminating the need to stop and check hole placement when operating in manual mode.



Main benefits

Better face coverage
- DD423iE has extra coverage that allows more drilling without moving the machine or using a benching method to drill the face.

Improved crosscut drilling
- DD423iE can drill wider crosscuts and more slashing holes without moving the machine several times.

One setup can do more drilling
- Can drill easily in three directions with one machine setup.

Improved operator vision
- Improved safety, less requirements for operator to leave the cabin during operation.
- Continuous drilling with no stopping to check hole placement when in manual mode.

Improved air quality (cabin)
- Reduced airborne particles.
- Healthier environment for operators.

Longer tramming distance
- Can get to more faces without charging.
- Helps with daily mine planning.
- Efficiency increase due to less stops for charging.

Shorter charging time
- Machine is back to work quicker.
- Increased availability of machine for normal operation.



Optimized working environment

Modern and ergonomic cabin for maximum operator comfort. Reduced noise level and improved visibility with full glass door.

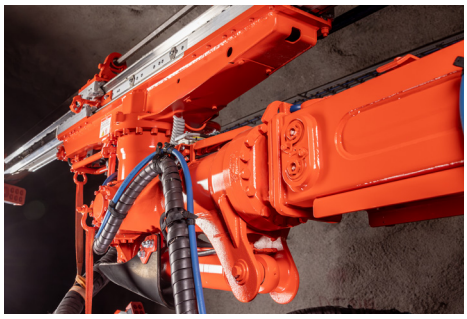

Larger coverage with SB75i

Sandvik SB75i boom is a hydraulic universal double roll-over boom for face drilling. It offers a larger coverage than the SB60i boom.

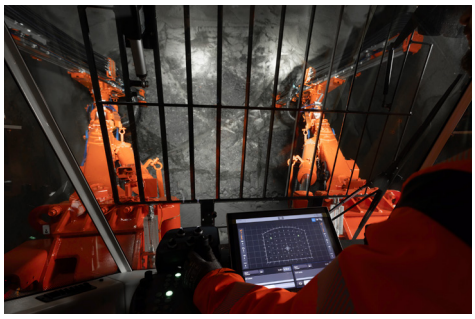

High-level automation

With the Sandvik DD423iE, you can achieve high-level automation up to the optional Platinum level to maximize drilling efficiency and extend the lifetime of drilling tools.



Digital Driller™

Through simulation, operators develop skills fully from basic boom movements and manual drilling to full automated drilling operations using various training scenarios.

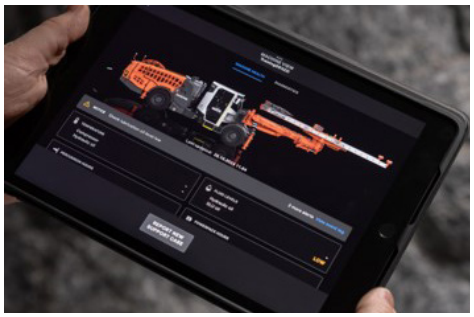

Sandvik DrillConnect

Readiness for Sandvik DrillConnect mobile application for improved data management and enhanced maintenance, and My Sandvik digital services.

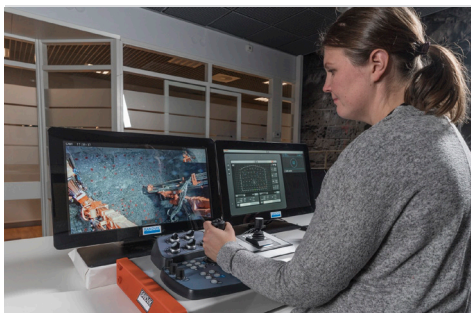

Teleremote drilling

Teleremote drilling allows a better utilization of workforce and equipment and improved operator safety and performance.



Sandvik 365 Parts and Services

Proudly keeping you on track!

Sandvik 365 Parts & Services offer a variety of possibilities to enhance your Sandvik DD423iE drill's performance.

As an OEM, we provide the best-suited choices to preserve your machine's high performance throughout its lifetime.

These consist of highly skilled service specialists supporting you 365 days a year, all using Sandvik genuine parts and components complemented by a range of robust tools.

In addition, you get to enjoy the benefits of advanced digital services and a global infrastructure dedicated to keeping your Sandvik fleet on track.

Technical Specification

Hydraulic rock drill

Type of rock drill	RD525 (TS2-236)
Percussion power	25 kW
Percussion pressure	Max. 220 bar
Percussion rate	93 Hz
Stabilizer	Hydraulic
Rotation speed	Max. 280 rpm (with OMS125)
Rotation torque	625 Nm (with OMS125)
Hole size (bolting)	43 – 64 mm
Hole size (reaming)	76 – 127 mm
Recommended tools 43 - 45 mm: 48 - 51 mm:	 T38 – H35 – Alpha® 340 T38 – H35 – Alpha® 360 T38 – R39 – Alpha® 360
Shank adapter	T38 (male)
Weight	225 kg

Fixed drilling feed

Type of feed	TF5i-12' Standard	TF5i-14' Optional	TF5i-16' Optional	TF5i-18' Optional	TF5i-20' Optional
Feed force (max.)	25 kN	25 kN	25 kN	25 kN	25 kN
Feed extension	1 650 mm	1 650 mm	1 650 mm	1 650 mm	1 650 mm
Total length	5 355 mm	5 965 mm	6 575 mm	7 185 mm	7 710 mm
Hole length	3 440 mm	4 050 mm	4 660 mm	5 270 mm	5 880 mm
Rod length	3 700 mm	4 305 mm	4 915 mm	5 525 mm	6 135 mm
Net weight	500 kg	530 kg	560 kg	590 kg	620 kg

Telescopic drilling feed (options)

Type of feed	TFX6/12	TFX8/14	TFX10/16
Feed force (max.)	25 kN	25 kN	25 kN
Feed extension	1 650 mm	1 650 mm	1 650 mm
Total length	3 560 / 5 390 mm	4 170 / 6 000 mm	4 780 / 6 610 mm
Hole length	1 610 / 3 440 mm	2 220 / 4 050 mm	2 830 / 4 660 mm
Rod length	1 830 / 3 700 mm	2 440 / 4 305 mm	3 050 / 4 915 mm
Net weight	640 kg	680 kg	730 kg

Boom

Type of boom	SB75i (TS2-577)
Parallel coverage	74.5 m² (for one boom) 80.7 m² (with two booms on DD423iE)
Parallelism	Electric
Boom extension	1 700 mm
Bolt hole drilling	Yes
Roll-over angle	360°
Boom weight, net	2 400 kg

Hydraulic system

Powerpack	1 x 160 kW (tramming and drilling)
Percussion and feed pump	110 cc
Rotation pump	60 cc
HVAC (Heating, Ventilation, and air conditioning) pump	26 cc
Filtration size (pressure / return)	20 µ / 10 µ
Oil tank volume	270 liters
Oil tank filling pump	Electric
Cooler for hydraulic oil	OW30 oil-to-water (2 x 30 kW)

Drilling control system

Type of control system	SICA
Drilling control modes	Torque optimized/feed percussion/manual
Comprehensive diagnostic system	
Electronic joystick controls	
Advance carrier functions	
15" full color touch screen	
Basic angle & drilling depth measurement	
Reference hole & penetration rate information	
Advanced boom manipulator mode	
Counters for drilling consumables	
Cable kit for spare part programming	
Safety lock for movement prevention	2 switches
Newtrax MDP	With configuration readiness

Automation package, Gold level (Standard)

Drill plan visualization onboard
Display of drill bit location vs. given drill plan
iSURE® Basic license
Drill rig suitable with various navigation methods
Advanced MWD data collection with analyses tool (iSure)
DrillConnect mobile application : Connectivity through Knowledge box™ for easy data transfer to and from the rig

Automation package, Platinum level (Option)

Automation Gold package content
Hole end correction from different start point
Semi-automatic boom movements
Automatic boom movements (full face automation)
Boom collision avoidance system (separate option)

Electric system

Multivoltage	Compliance from 380 to 1 000 V, 50 and 60Hz
Total installed power	205 kW
Main switch gear	MSE20
IP classification	Specification TS2-132
Starting method	Inverter controlled soft starting Typical inrush current peak less than 1 kA (duration less than 20ms)
Automatic cable reel	TCR4CD with spooling system
Cable reel control	Operator station and remote control at rear machine
Front lights	6 x 50 W LED (24V) >125lx, 20 000 lm; 6 000 k
Rear lights	2 x 50 W LED (24V) and 2 x 17 W LED (24V) 8 000 lm; 6 000 k
Parking rear brake /park lights	2 x Red LED
Stair and service lights	LED (24 V)
Amber flashing light	LED (24 V)
Electric quality monitoring	Voltage, Amperage, Power, Pf Energy, Phase-sequence
Onboard battery package	3 x Lithium iron phosphate battery 183 kWh max. energy
Usable energy onboard	155 kWh (3 x LFP batteries)
Onboard charging transformer	120 kVA
Intelligent power management system	Battery charging during drilling, Presettable power compensation available from the batteries during peak loads in drilling
Protection	MSE IP66/Nema4x, junction boxes ≥ IP68

Technical Specification

Air and water flushing

Flushing of holes	By water
Water booster pump type	WBP2 HP
Water pump capacity	185 l/min
Water pump inlet pressure	2 bar (min.)
Flushing water pressure	10 - 15 bar
Shank lubrication device	SLU2 (air / oil mist)
Air compressor	CTN10 (1.0 m³/min at 7 bar)
Compressed air and water outlet	Quick coupling
Oil consumption	150 - 250 g/h
Air consumption	250 - 350 l/min

Operator's safety cabin

Safety cabin certification	FOPS / ROPS (ISO 3449 / 3471) with safety grill
Operation	Seated tramming Standing and seated drilling
Sound pressure level	According to EN16228, ISO1120. Operator station: 69 db(A)
Vibration level	According to EN16228, ISO2631-1 ISO5349-1, ISO5349-2
Seat	Fully adjustable seat (tramming and drilling)
Optimized dust level control via air circulation	
Air conditioning	EU6/7 filtering capacity
Cabin heating	During tramming and drilling
Electricity outlets	1 x 12 V and MP3 player readiness
Audio player	MP3 player with radio and loudspeaker
Boot washer	At each cabin entrance
Safety laminated acoustic windows	

Carrier

Type of carrier	C403E (frame-steered)
Carrier articulation	± 40°
Rear axle oscillation	± 8°
Ground clearance	330 mm
Transmission	Inverter controlled electric motor with mechanical link to axles
Axles	Dana Spicer
Tires	14.00–24 PR28
Brakes	SAHR type, fail-safe wet disc brakes
Tramming speed	12 km/h (flat ground) 8.0 km/h (1:7 incline upwards)
Tramming distances	45 km (flat ground), 9.0 km (1:7 incline upwards)
Gradeability / sideways tilt	Max.15° / 5° (according to EN 16228-2)
Hydraulic jacks	2 x SJ500 (front), 2 x SJ600 (rear)
Wheel chocks and holders	2 Sets
Centralized greasing points	Specification TS2-463
Manual greasing system	Pump, reel and nozzle (TS2-463)
Hand held fire extinguisher	1 x 7.7 or 9 kg (type ABC)
Tramming alarm	Standard
Toolboxes and first aid kit	
Knowledge Box™	Connectivity solution (TS2-535)
Color scheme	Sandvik
Documentation	1 x Operator's manual 1 x Maintenance manual 1 x Technical manual (in English only) 1 x Parts manual (in English only) 2 x E-manuals on USB

Optional features and packages

Rock drill	
*Type of rock drill	RD520, RDX5 (OMS80)
Power extractor	for RD525, RD520, RDX5
Stabilizer diagnostics indicator	for RD520 or RD525
Feed	
Type of feed	14', 16', 18', 20', TFX6/12, 8/14, 10/16
Rod retainer	TRR1 incl. safety wire, add 35 mm length
Two rods system	TRS included TRR1 with safety wire
Drill bit changer	12 x std bits (45 / 48 / 51mm bits) + 2 reaming bits incl. SCR rod retainer
Hydraulic system	
Vacuum pump	
By pass oil filter	For hydraulic system
Drilling control system	
Boom collision avoidance system	
Boom control while tramming	
Reversed bolt joint	
Data transfer	WLAN including remote GUI view
Access detector and protector	Mandatory in Europe (TS2-211)
DrillConnect mobile application	Connectivity through Knowledge box™ for easy data transfer to and from the rig
iBolt systematic	Specification TS2-599
Air and water system	
Air mist flushing kit	2 x OA40, IP5 air cleaner and flow control
*End of hole air flushing	Including CT28 air compressor
Water hose reel with water hose	THR2.5E with 38 mm (1 ½"), 65 m
Cleaning system	
HP system with reel	Up to 180 bar (TS2-343)
Greasing systems	
Automatic system	Lincoln (complete)
Electric system	
*Electric cables	Specification TS2-121
Ground fault and overcurrent protection	VYK
Dewatering pump outlet	8kW, site voltage 380 - 690 V, 50/60Hz 8kW, 400 V, 50/60Hz with transformer
Remote controlled spot lights	2 pcs
Indicator lights	For jacks up / down
Earth continuity control	1 wire pilot circuit with remote reset / disconnect
Auxiliary outlet	1 x 230 V, 16 A, 2kW
Battery jump start	Optional
Jack leg movement flashing light	LED
Indicator light for boom movement prevention switch status	2 x on both sides, 1 x inside cabin (green or red depending status)
Operator's safety cabin	
*Low height cabin	Height 2 900 mm with safety grill
*Low height unit	Height 3 050 mm (incl. tram camera) (std cabin w/o 100 mm ex. pieces)
Safety grill lifting mechanism	400i serie Cabin
Tramming camera	Rear and side
Fire suppression system	
Spare hand held fire extinguisher	1 x 7.7 or 9 kg (type ABC)
Manual or automatic system	Ansul, 6 nozzles (TS2-460)
Carrier	
*Foam filled tires	4 pcs
Hydraulic jacks	Horizontal extendable jacks
Fast filling system	Complete
Rod rack	On carrier side (Max. 400 kg)
Extra items	
Spare rock drill	RD525, RD520, RDX5
Spare wheel assembly	14.00-24 PR28 or foam filled tire
Warranty extension	One year (excl. Kazakhstan)
Special tools for rock drill	Field tool set, complete tool set
Spare batteries	3 x LFP battery (purchased or rental)
Documentation	Extra, Catbase, Link one manuals
iSURE®	Complete for one year
iSURE® Geo	ProStart or Perpetual (incl. iSURE® Complete)
Packages: Automation	Platinum
Packages: Extreme environment	Specification TS2-337
Package: Teleremote drilling	Specification TS2-422
Package: iNav total station	Specification TS2-575
Package: Operator cabin comfort	

**) Replaces standard feature*

Technical drawings

All dimensions in mm

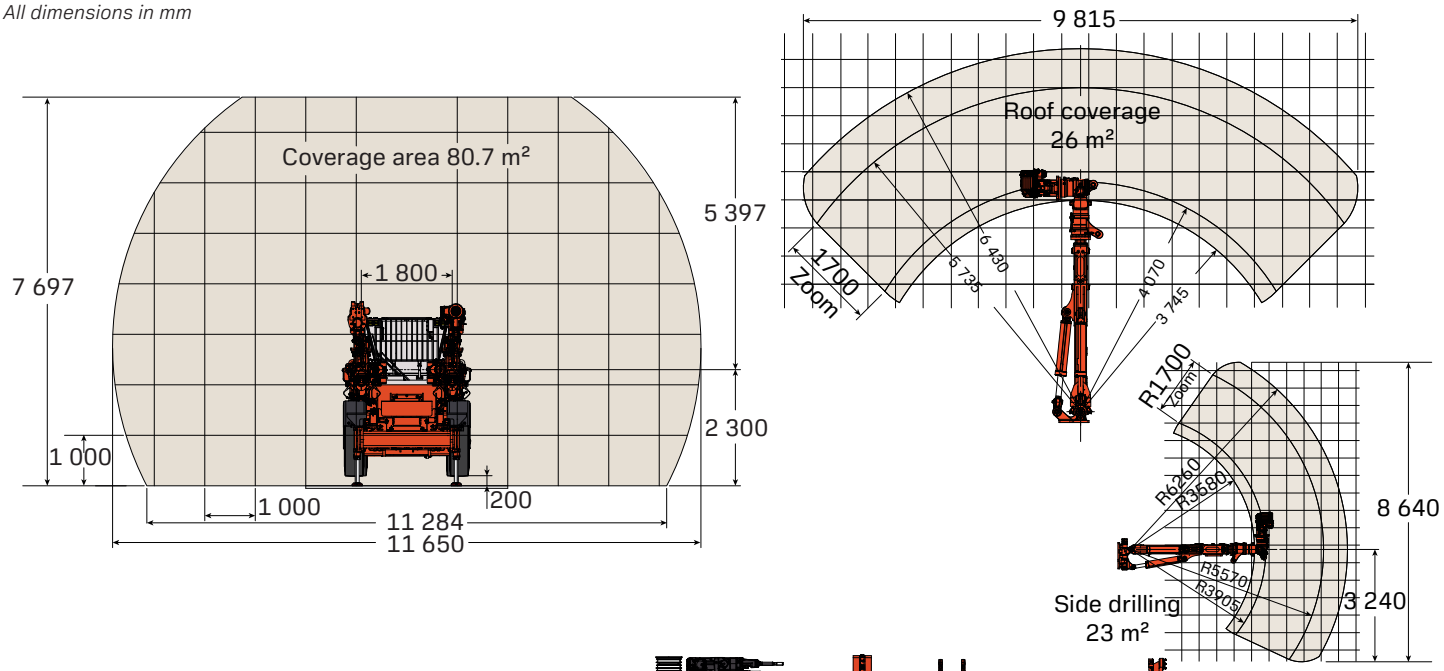

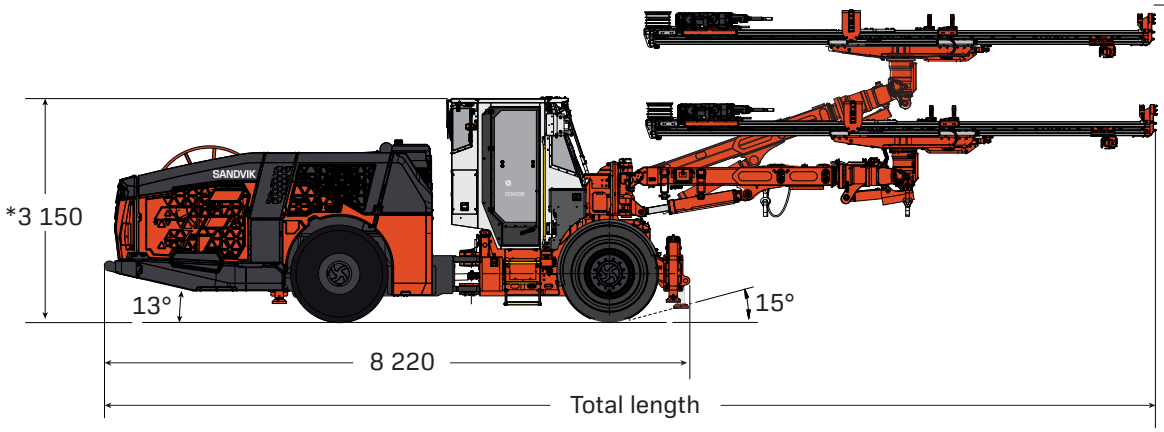

*) 3 050 mm with low height unit option
2900 mm with low height cabin option

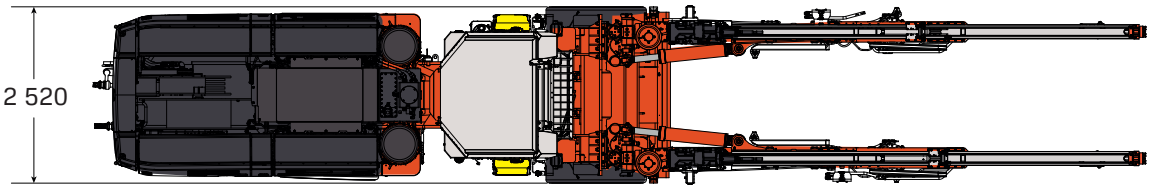

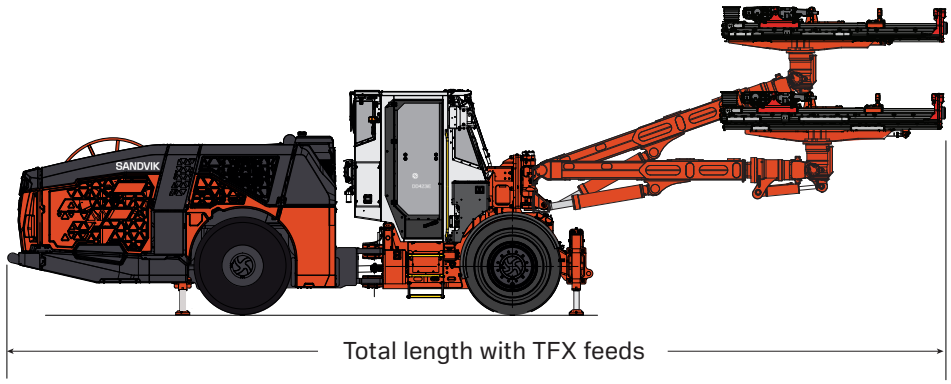

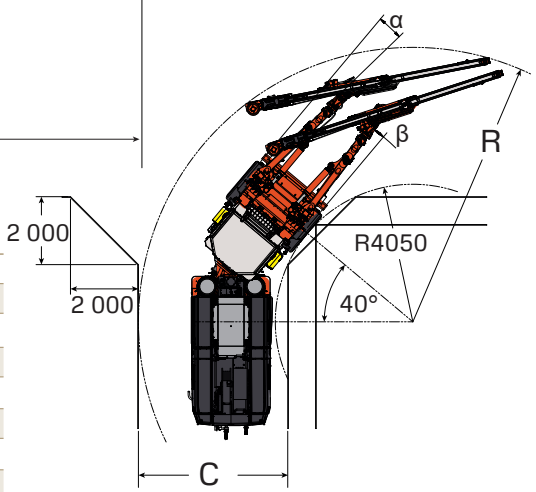

Type of feed	Radius (R)	T-cross (C)	Left boom angle (α)	Right boom angle (β)	Overall length
TFi500-12'	7 700 mm	4 015 mm	6°	3°	13 485 mm
TFi500-14'	7 805 mm	4 125 mm	6°	3°	13 685 mm
TFi500-16'	7 935 mm	4 255 mm	6°	3°	14 135 mm
TFi500-18'	8 080 mm	4 400 mm	6°	3°	14 885 mm
TFi500-20'	8 215 mm	4 530 mm	6°	3°	15 490 mm
TFX6/12	7 610 mm	3 625 mm	3°	6°	13 445 mm
TFX8/14	8 000 mm	4 315 mm	3°	6°	13 520 mm
TFX10/16	8 120 mm	4 435 mm	3°	6°	14 130 mm

SANDVIK

TS2-587:01ENG© Sandvik Group 2016 – 2026
SANDVIK is a registered trademark owned by Sandvik Group in Sweden and other countries.
Sandvik Group reserves the right to make changes to the information on this data sheet without prior notification to users. Please contact a Sandvik representative for clarification on specifications and options.

*Test results and calculations are to be considered as results reached under certain and controlled conditions. These test results and calculations should not be treated as specifications and Sandvik does not guarantee, warrant or represent the outcome of test results or calculations in any or all circumstances.