SANDVIK

DD212
Development drill

Technical Specification



ROCKTECHNOLOGY.SANDVIK



Versatility in narrow vein drilling

Sandvik DD212 is a compact and flexible single-boom electro-hydraulic jumbo for tunneling and mining development in narrow vein drifts.

Equipped with the new hydraulic boom SB20i, this drill has a large coverage of up to 25 m². Thanks to the one meter boom extension, the 360-degree rotation and full automatic parallelism with electronic positioning, this drill offers accurate face drilling.

The THC561 drilling control system allows DD212 to deliver higher drilling performance and to reduce the wear on both rock drill and rock tools.

The compact versatile CFX feed system allows mines to open smaller tunnel sections reducing overbreak / dillution / hauling cost to remove ore.

The RDX5 rock drill ensures fast drilling cycle time and low operating cost.

Key features

Coverage	25 m² auto-parallel
Drift size class (H x W)	2 500 mm x 2 500 mm
Hydraulic rock drill	RDX5
Drill feed	TF500, 10 - 12 ft CFX6/12, CFX-XS
Boom	SB20i
Turning width (T-section)	2 655 mm (CFX-XS)
Transport width	1 400 mm
Transport height	2 060 mm / 2 735 mm
Transport length	9 800 mm (TF512)
Total weight	10 850 kg depending on options



Main benefits

Low total cost of ownership

Sandvik DD212 is a compact drill enabling mines to operate in small tunnel sections and increase productivity with more drilled meters.

The rig brings operational safety and versatility for tackling different applications, precise electronic positioning, ergonomic operator interface, data monitoring, all leading to superior pull-out ratio and reduced tool consumption, ensuring to deliver the best fit in narrow vein drilling.



Faster cycle time

Up to 20%*
time saving in
boom positioning

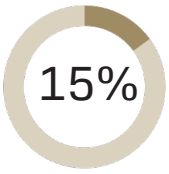

Greater efficiency

Up to 15%*
gain in drilling time

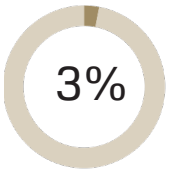

Productivity

Up to 3%*
improvement in
pull-out ratio



Efficient control system

The THC561 drilling control system with reaming hole selector increases drilling performance and reduces the wear on both rock drill and rock tools for an extended lifetime.
The operating environment, and incorporated automatic functions allow the operator to concentrate on safe, precise and productive operations.



Instrumentation onboard

The onboard instrumentation allows for fast and precise positioning of the drill feed and tool, measurement of hole angles, setting predefined target angles, and configuring different angles for cutting and contour holes.



Versatile drill

The drill designed for face drilling, bolting and crosscutting. It is equipped with the SB20i hydraulic boom with one meter boom extension, 360-degree rotation and full automatic parallelism - to ensure easy, fast feed positioning and accurate face drilling, leading to up to 15% gain in drilling time.

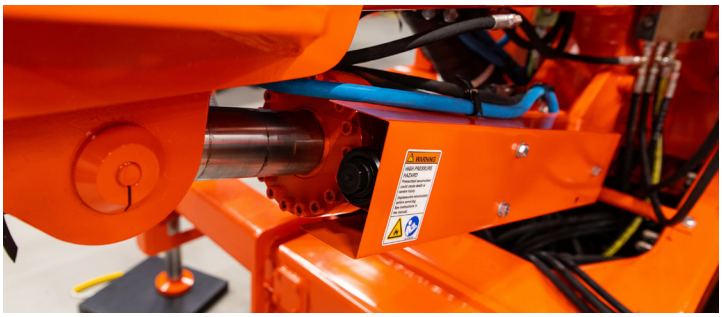

Boom suspension system option (Spec.TS15-232)

The main purpose of the boom suspension system is to extend the lifetime of boom and carrier parts by reducing the vibrations and peak forces carried to the boom when the machine is tramming in tunnels. It also improves significantly the operator comfort.



Sandvik 365 Parts and Services

Proudly keeping you on track!

Sandvik 365 Parts & Services offer a variety of possibilities to enhance your Sandvik DD212 drill's performance.

As an OEM, we provide the best-suited choices to preserve your machine's high performance throughout its lifetime.

These consist of highly skilled service specialists supporting you 365 days a year, all using Sandvik Genuine parts and components complemented by a range of robust tools.

In addition, you get to enjoy the benefits of advanced digital services and a global infrastructure dedicated to keeping your Sandvik fleet on track.

Technical Specification

Hydraulic rock drill

Type of rock drill	RDX5 (TS2-433)
Percussion power	20 kW
Percussion pressure	175 bar
Percussion rate	67 Hz
Rotation speed	Max. 250 rpm (with OMS80)
Rotation torque	400 Nm (with OMS80)
Hole size (bolting)	43 – 64 mm
Hole size (reaming)	76 – 127 mm
Recommended tools 43 - 45 mm: 48 - 51 mm:	 T38 – H35 – Alpha 340 T38 – H35 – Alpha 360 T38 – R39 – Alpha 360
Shank adapter	T38 (male)
Weight	210 kg
Filling device for accumulators	Specification TS2-430

Drilling feed

Type of feed	TF500-10' (RDX5) Optional	TF500-12' (RDX5) Standard	CFX6/12 (RDX5) Optional	CFX6/12 (RD314) Optional	CFX-XS (RD314) Optional
Feed force (max.)	25 kN	25 kN	23 kN	23 kN	20 kN
Hole length	2 830 mm	3 440 mm	1 520 / 3 350 mm	1 587 / 3 417 mm	1 070 / 2 132 mm
Rod length	3 090 mm	3 700 mm	1 830 / 3 660 mm	1 830 / 3 660 mm	1 830 / 2 435 mm
Total length	4 690 mm	5 300 mm	3 285/ 5 115 mm	2 930 mm 4 765 mm	1 965/ 3 035 mm
Net weight (w/o rock drill)	470 kg	500 kg	566 kg	527 kg	416 kg

Boom

Type of boom	SB20i (TS2-432) Versatile NV boom
Parallel coverage	25 m² auto-parallel
Parallelism	Electronic automatic
Boom extension	1 000 mm
Feed extension	1 350 mm (TF feed)
Boom swing, left and right	± 30° (limited)
Roll-over angle	360°
Feed swing angle	240°
Boom weight, net	1 550 kg

Hydraulic system

Powerpack	HPP545 (1 x 45 kW)
Filtration size (pressure / return)	20 µ / 10 µ
Oil tank volume	165 liters
Cooler for hydraulic oil	Harsh water cooled OW25 oil-to-water (25 kW)

Drilling control system

Type of control system	THC561 (TS2-362)
Operating principle	Hydraulic control
Controls	Direct control Fully proportional Fast rock drill return movement
Drilling control	Feed / percussion control Anti-jamming system Reaming control
Automatic cycle	Stop and return automatics (for feed without rod retainer)
Rotation speed selector	Two rotation speeds can be preset
Display default	QN panel
Boom inibition switch	At each side of the machine

Electric system

Multivoltage	380 – 690 V (±10%)
Total installed power	60 kW
Main switch gear	QM14
IP classification	Specification TS2-132
Starting method	Star delta starter 380 - 575 V Direct on line 600 V - 690 V
Automatic cable reel	CRQ with six turn indicator light and three turn interlock system
Cable reel control	At operator station
Front lights	4 x 50 W LED (24V), (4 200 lm, 6 000 K)
Rear lights	1 x 50 W LED (24V), (4 200 lm, 6 000 K)
Parking rear brake /park lights	1 x Red LED
Sealed AGM batteries	2 x 12 V, 90 Ah
Low level hydraulic oil	Indicator and switch
Emergency stop	On the electric cabinet, at right side machine and on drilling panel

Air and water flushing

Flushing of holes	By Water
Water booster pump type	WBP1
Water pump capacity	33 l/min at 15 bar
Water pump inlet pressure	2 - 7 bar
Flushing water pressure	10 - 15 bar
Shank lubrication device	SLU1 (air / oil mist)
Air compressor	1 m³/min at 7 bar
End of hole air flushing	1 x 60 liters air receiver
Oil consumption	180 - 250 g/h
Air consumption	250 - 350 l/min

Operator's safety cabin

Safety canopy certification	FOPS (ISO 3449)
Unit height in tramming	2 735 mm
Operation	Seated tramming Standing drilling
Sound pressure level according to EN 16228	Operator station: 102 dB(A) Emitted: 124 dB(A)
Operator's seat	Ergonomic, adjustable for tramming including seat belt

Technical Specification

Carrier

Type of carrier	TCQ (articulated frame)
Carrier articulation	± 27°
Rear axle oscillation	± 6°
Ground clearance	210 mm
Diesel engine	Deutz D914L04, 55 kW (Tier 4i, Stage IIIA, MSHA)
Exhaust catalyzer	Standard
Transmission	Hydrostatic
Axles	4 x radial piston
Tires	300 x 15, 8.00 - 15
Service brakes	Hydrostatic transmission
Parking and emergency brakes	SAHR type, fail safe wet disc brakes ABA brakes
Tramming speed	6.0 km/h (Horizontal) 4 km/h (14%=1:7=8°)
Gradeability / sideways tilt	Max.15° / 5° (according to ISO 18758)
Fuel tank	75 liters
Hydraulic jacks	2 x telescopic jacks (front) 2 x Vertical jacks (rear)
Brake release	Manual hand pump
Centralized greasing points	Carrier only (TS2-463)
Reverse tramming alarm	Standard
Knowledge Box™	Connectivity solution (TS2-535) My Sandvik insight readiness (TS2-390)
Documentation	1 x Operator's manual 1 x Maintenance manual 1 x Technical manual (in English only) 1 x Parts manual (in English only) 2 x USB key of manual (PDF format) 1 x Online Parts manuals

Optional features and packages

Rock drill	
*Type of rock drill	RD314 with CFX-feeds
Feed	
Type of feed	TF510, CFX6/12, CFX-XS
Rear stinger (CFX-feed)	600 mm (vertical hoses), incl. rod retainer
Rod retainers	For CFX-feed or TF-feed with TRR1 incl. safety wire, add 35 mm length of the feed
Boom	
Boom suspension system	Smooth tramming, improved ergonomy
Hydraulic system	
Filling pump for hydraulic oil	Electric
Cooler for hydraulic oil	OA25 oil-to-air (25 kW)
*Biodegradable hydraulic oil	PLANTOFLUX AT-S 68, flameproof
Drilling control system	
Drill instrument	Feed angles
Access detector and protector	Mandatory in Europe (TS2-211)
Air and water system	
Air mist flushing kit	External air / external or internal water Internal air / external or internal water
Air cleaner for external air	IP5 with air mine connection
Water hose with hooks	32 mm (1¼"), 80 meters
Cleaning system	
HP system without reel	Up to 180 bar (TS2-343)
Greasing systems	
Manual system	Greasing gun and cartridge with hose reel (TS2-463)
Electric system	
*Optional voltage	1 000 V (50 or 60 Hz) with DOL starter (machine height mini 2 470 mm)
*Dual voltage kit	380 - 660 V (50Hz)
*Electric cable	Specification TS2-121
Ground fault and overcurrent protection	VYK
Battery jump start	Optional
Amber flashing light	LED
Operator's safety cabin	
Safety grill	For canopy or all around canopy
Fire suppression system	
Hand held fire extinguisher	1 x 6 kg (type ABC), Desautel or 1 x 8 kg (type ABC), Ansul
Manual system	Ansul, 6 nozzles (TS2-460)
Auto. fire suppression system	Sandvik Eclipse™ (TS2-461)
Carrier	
*Diesel engine	Deutz TCD2.2 L4, 55 kW Stage V, Tier 4F Deutz D914L04, 52 kW, Tier 3, CANmet
*Diesel engine, for high altitude	Deutz BF4L914 EMR, 72 kW, Tier 2
*Foam filled tires	4 pcs
Wheel chocks and holders	2 Sets
Speedometer	Speed display
Knowledge Box™	My Sandvik productivity readiness (TS2-390)
Extra items	
Berg plug / berg socket	250A
Spare rock drill	RDX5, RD314
Spare wheel assembly	Standard or foam filled tire
Special tools for rock drill	Field tool set (TS2-434) Complete tool set (TS2-435)
Tools and pressure test box	Specification TS2-429
Documentation	Extra paper or PDF manuals
Warranty extension	One year (excl. Kazakhstan)
Package: Country specific	CIS, AUS, EUR, US/CAN
*Package: Harsh water	Basic or advanced (TS2-049)
*Package: Arctic	For extreme conditions (below 0 °C)
*Package: Longhole drilling	LHF drilling module (TS2-474)

**) Replaces standard feature*

Technical drawings

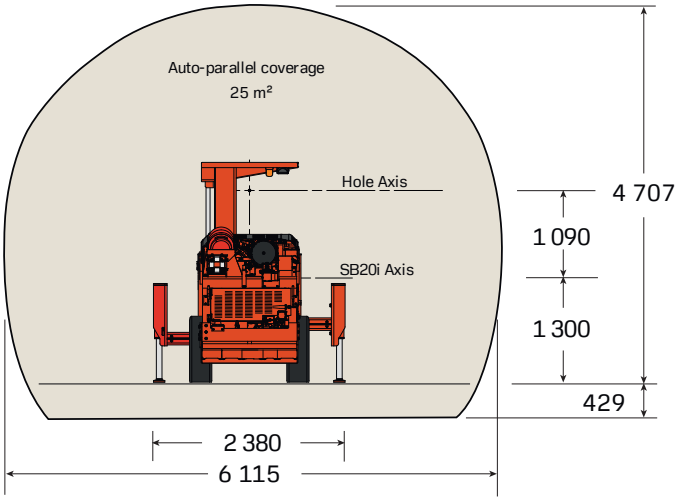

Coverage dimensions with SB20i with CFX6/12+ RDX5

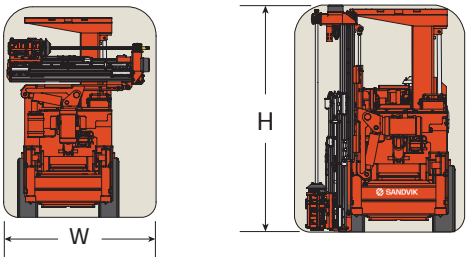

Type of feed	SB20i + CFX6/12 + RDX5 (Optional)	SB20i + CFX6/12 + RD314 (Optional)	SB20i + CFX-XS + RD314 (Optional)
*W (mini)	3 400 mm	3 000 mm	2 100 mm
*H (mini)	3 400 mm	3 000 mm	2 530 mm (FOPS mini)
*)100 mm clearance minimum			

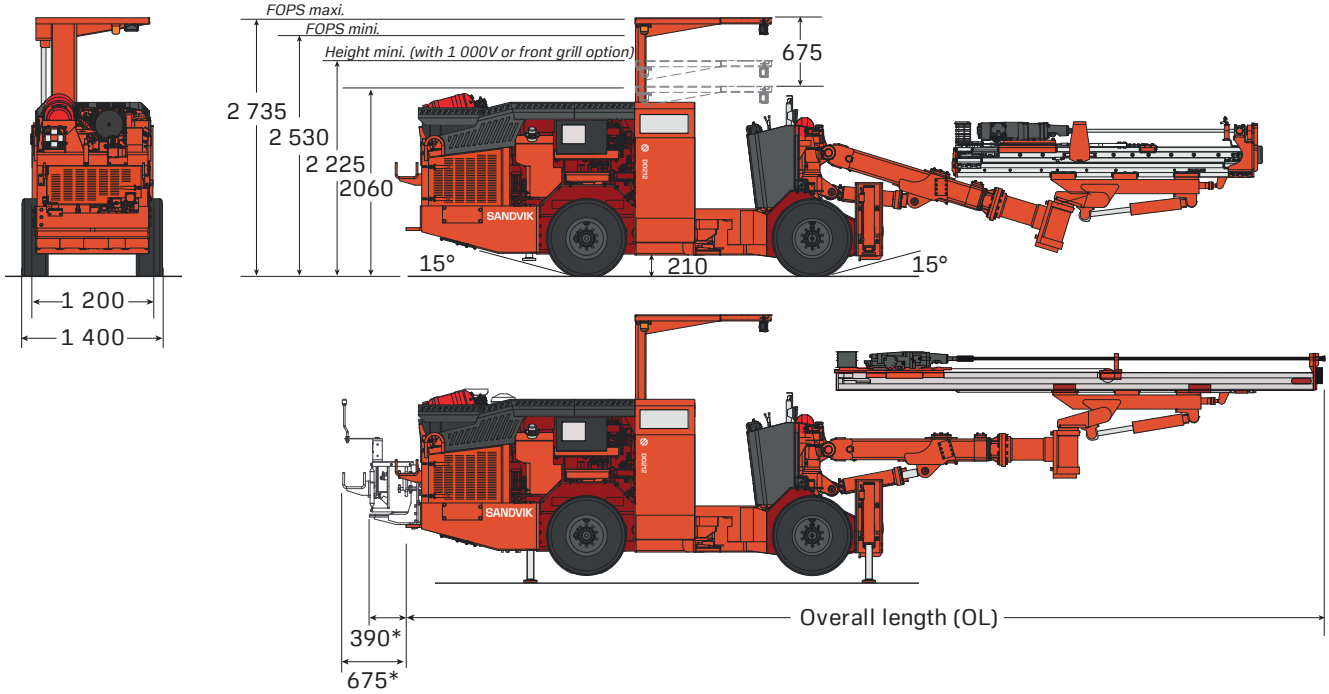

*) Dimensions with optional diesel engine Stage V

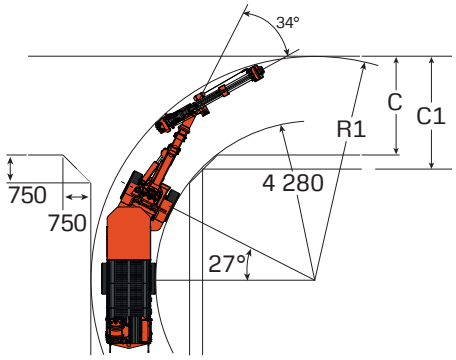

Type of feed	SB20i + TF5i-12 (Standard)	SB20i + CFX6/12 (Optional)	SB20i + CFX-XS (Optional)
Overall length	9 800 mm	9 085 mm	8 135 mm
Turning radius (R1)	6 428 mm	6 144 mm	6 030 mm
Cornering (C)	3 060 mm	2 770 mm	2 655 mm
Cornering (C1)	3 435 mm	3 145 mm	3 030 mm
Values realised with 5° of the sideways tilt (according to ISO 18758)			

SANDVIK

TS2-431:07ENG©Sandvik Mining and Rock Solutions 2024 SANDVIK ,
iSURE® and DIGITAL DRILLER™ are trademarks owned by the Sandvik group of companies.

*Test results and calculations are to be considered as results reached under certain and controlled conditions. These test results and calculations should not be treated as specifications and Sandvik does not guarantee, warrant or represent the outcome of test results or calculations in any or all circumstances.