SANDVIK

Toro® LH621i

Safer.
Stronger.
Smarter.

Technical specification

Toro® LH621i

Toro® LH621i is a 21 tonne loader made for rapid mine development and large scale underground production. With superior hydraulic power for fast bucket filling and drivetrain power for high ramp speed, the loader is designed to quickly clear tunnel headings.

Toro® LH621i is equipped with a fuel efficient 352kW Tier 2 engine as standard. Stage V state-of-the-art low emission engine option is also available with the use of ultra low sulphur diesel fuel. Both of these engines come with an engine brake.

The equipment cabin offers superior operator ergonomics and comfort through a slim line dash board, 7” color touch screen display, greater headroom, increased leg space and improved pedal positions. To improve maintainability and serviceability, the loader has been designed with smarter placement of key service areas and safer service access.

In the area of digitalization and intelligence, Toro® LH621i loader features multiple smart solutions such as Sandvik Intelligent Control System, My Sandvik Digital Services and The Knowledge Box™ on-board hardware as standard. The Integrated Weighing System (IWS) is optionally available for measuring payload in the bucket as well as the number of buckets filled during a shift.

Designed for automated mining operations, Toro® LH621i is fully compatible with AutoMine®, enabling integration with our industry-leading automation ecosystem to improve productivity, safety and operational performance.

SHARK™ Ground Engaging Tools (G.E.T.) are available on a wide range of bucket sizes, optimized for loader productivity and extended bucket service life.

Capacities	
Maximum tramming capacity	21 000 kg
Break out force, lift	38 500 kg
Break out force, tilt	35 100 kg
Standard bucket	8.0 m^3

Bucket motion times	
Raising time	8.4 sec
Lowering time	4.5 sec
Dumping time	1.8 sec

Operating weights *	
Total operating weight	58 800 kg
Front axle	25 400 kg
Rear axle	33 400 kg

Loaded weights *	
Total loaded weight	79 800 kg
Front axle	58 100 kg
Rear axle	21 700 kg

* Unit weight is dependent on the selected options

Speeds forward & reverse (Level/loaded, with lock-up)		
Engine	Tier 2	Stage V
1st gear	4.7 km/h	5.0 km/h
2nd gear	8.4 km/h	9.0 km/h
3rd gear	14.5 km/h	15.6 km/h
4th gear	25.9 km/h	27.8 km/h

Operational conditions and limits	
Environmental temperature	From -20°C to +50°C
Standard operating altitude	With engine Volvo TAD1344VE from -1500 m to +2000 m at 25 °C without rated power derate

Requirements and compliance
Compliance with 2006/95/EC Low voltage directive
Compliance with 2004/108/EC Electromagnetic compatibility directive
Compliance with 2006/42/EC Machinery directive (Equipment for EU area, achieved with relevant options)
Design based on EN 1889-1. Machines for underground mines. Mobile machines working underground. Safety. Part 1: Rubber tyred vehicles.
Design based on MDG 15. Guideline for mobile and transportable equipment for use in mines. (Equipment for Australia, achieved with relevant options)
Electrical system based on IEC 60204-1. Safety of machinery – Electrical equipment of machines – Part 1: General requirements
CONTAINS FLUORINATED GREENHOUSE GASES Refrigerant R134a under pressure max 38 bar/550 PSI: Filled weight: 1.6 kg CO2e: 2.288 tons GWP: 1430 Information based on the F Gas Regulation (EU) No 517/2016

Power train	
Diesel engine	Volvo TAD1344VE
Output	352 kW @ 2 100 rpm
Engine brake	Yes
Torque	2 005 Nm @ 1 260 rpm
Number of cylinders	In-line 6
Displacement	12.78 l
Cooling system	Liquid cooled and piston pump driven cooler fan
Combustion principle	4-stroke, direct injection, turbo with intercooler
Air filtration	Two stage filtration, dry type
Electric system	24 V
Emissions	Tier 2
Ventilation rate (Ultra low sulphur diesel)	CANMET 13.54 m^3/s MSHA 21,000 CFM
Particulate index (Ultra low sulphur diesel)	MSHA 12,500 CFM
Exhaust system	Catalytic purifier and muffler, double wall exhaust pipe
Average fuel consumption at 40% load	36.0 l/h
Fuel tank refill capacity	760 l
Compatible with paraffinic diesel fuel (EN 15940)	Yes

Converter
Dana SOH 9000 series with lock-up

Transmission
Power shift transmission with modulation. Dana SOH 8000 series, automatic gear shift control, four gears forward and reverse.

Axles	
Front axle, spring applied hydraulic operated brakes. Fixed.	Kessler D116, limited slip differential
Rear axle, spring applied hydraulic operated brakes. Oscillating ± 8°.	Kessler D116, limited slip differential

Tires
Tire size 35/65 R33 L5** (Tires are application approved. Brand and type subject to availability.)

Hydraulics
Electric filling pump for hydraulic oil
Door interlock for brakes, boom, bucket, and steering hydraulics
Oil cooler for hydraulic and transmission oil capability up to 50°C ambient temperature
ORFS fittings
MSHA approved hoses
Hydraulic oil tank capacity 480 l
Sight glass for oil level, 2 pcs

Steering hydraulics	
Full hydraulic, centre-point articulation, power steering with two double acting cylinders. Steering lock. Steering controlled by electric joystick.	
Steering main valve	Open circuit type, LS controlled
Steering hydraulic cylinders	125 mm, 2 pcs
Steering pump	Piston type
Steering and servo hydraulic pumps	Piston type

Bucket hydraulics	
The oil flow from steering hydraulic pump is directed to bucket hydraulics when steering is not used. Joystick bucket and boom control (electric), equipped with piston pump that delivers oil to the bucket hydraulic main valve.	
Boom system	Z-link
Lift cylinders	200 mm, 2 pcs
Dump cylinder	250 mm, 1 pc
Main valve	Open circuit type
Pump for bucket hydraulics	Piston type, ED controlled

Brakes
Service brakes are spring applied; hydraulically operated multidisc wet brakes on all wheels. Two independent circuits: one for the front and one for the rear axle. Service brakes also function as an emergency and parking brake. Brake system performance complies with requirements of EN ISO 3450, AS2958.1 and SABS 1589.
Automatic brake activation system, ABA
Electrically driven emergency brake release pump
Brake oil tank capacity 120 l
Neutral brake

Cabin
ROPS certification according to EN ISO 3471
FOPS certification according to EN ISO 3449
Sealed, air conditioned, over pressurized, noise suppressed closed cabin
Sound absorbent material to reduce noise
Laminated glass windows
Cabin mounted on rubber mounts to the frame to reduce vibrations
Air conditioning and heating unit located inside the cabin
Powered pre-filter for A/C device
Adjustable joysticks
No high pressure hoses in the operator's compartment
Inclinometers to indicate operating angle
Emergency exit
Floor washable with water to reduce dust
Three-point contact access system with replaceable and colour coded handles and steps
12 V output
Remote circuit breaker switch

Control system, dashboard and displays
A 7" color display with advanced touch screen functionality has all the needed information and alarms on one large display giving the operator more time to keep eyes on the road. Dark background graphics with clear symbols are designed for the underground mining environment to reduce eye fatigue, while red interior cabin lighting is also designed to not affect night vision during driving.
Sandvik Intelligent Control System
My Sandvik Digital Services Knowledge Box™ on-board hardware
AutoMine® Loading readiness
7" color display with touch screen function, adjustable contrast and brightness, illuminated switches
Critical warnings and alarms displayed as text and with light
Supports 3G, 4G, LTE and WLAN data transfer

Operator's seat
The cabin is fitted with an adjustable low frequency suspension seat with two-point seat belt or optional high back seat with four-point seat belt. New softer padded arm rests and adjustable joysticks can be configured either on the cabin wall or fixed to the seat.
Low frequency suspension
Height adjustment
Adjustment according to the operator's weight
Fore-aft isolation
Padded and adjustable arm rests
Adjustable lumbar support
Selectable damping
Two-point seat belt
Seatbelt monitoring system

Measured vibration level	
Whole body vibration was determined while operating the loader in a simulated working cycle consisting of loading, unloading and driving with and without load. The value is determined applying standards EN 1032 and ISO 2631-1.	
Maximum r.m.s.value a_w [m/s^2]	1
VDV_w over 15 min period [$m/s^{1.75}$]	8,99

Measured sound level	
The sound pressure level and sound power level at the operator's compartment have been determined in stationary conditions on high idle and at full load, with engine Volvo TAD1374VE Tier 2.	
Sound pressure level L_{pA} [dB re 20 µPa]	75 dB
Sound power level L_{WA} [dB re 1 p W]	120 dB

Rear and front frame
The heavy duty rear frame with added weight in the rear of the loader balances the machine perfectly when lifting and pushing into the muck pile. Heavy duty rear frame and mask with integrated reaction bars minimize damages from wall impacts. High strength structure with optimized material thicknesses and reduced own weight contribute to higher overall hauling capacity and long structural lifetime. Welded steel box structures used in the frame and boom provide strong resistance to shock loads and are optimized to reduce stresses and extend frame lifetime.
Adjustable upper bearing in central hinge
Tanks welded to the frame
Automatic central lubrication

Electrical equipment	
Alternator	24 V, 150 A
Batteries	2 x 12 V, 180 Ah
Starter	9 kW, 24 V
Driving lights	LED lights: 4 pcs in front, rear and cabin
Working lights	LED lights: 1 pc under boom 2 pcs corner lights
Parking, brake and indicator (blinkers) lights	LED lights: 2 pcs in front and rear
Control system	5 modules, inbuilt system diagnostics
Dual horn configuration with separate alarms for start and reverse	
Flashing beacon	

Illumination	
Illuminance Eav with 2 pieces of 50 W led lights at a distance of 20 m in front of the loader:	
Head lights, high beam E_{av}	132 lx
Head lights, low beam E_{av}	33 lx
Illuminance Eav with 2 pieces of 50 W led lights at a distance of 20 m behind the loader: Toro® LH621i is compliant with the South African Mine health and safety act 29 of 1996, as the average light intensity in the direction of travel is more than 10 lux at a distance of 20 m.	

Fire safety
Portable fire extinguisher, 12 kg (CE requirement)
Hot side - cold side design
Isolation of combustibles and ignition sources
Heat insulation on exhaust manifold, turbo, and isolated exhaust pipe

Energy isolation
Lockable main switch, ground level access
Starter isolator
Emergency stop push buttons according to EN ISO 13850: 1 pc in cabin, 2 pcs in rear
Pressure release in the expansion tank cap
Automatic discharge for pressure accumulators (brake system and pilot circuit)
Frame articulation locking device
Mechanical boom locking device
Wheel chocks and brackets

Documentation	
Operator's Manual	English and other EU languages
Maintenance Manual	English and other EU languages
Parts Manual	English
Service and Repair Manual	English, Russian
E-manuals	2 x USB stick in pdf format, includes all manuals
Decals	English, Finnish, Swedish, Spanish, Russian, French, Polish, Portuguese, Turkish, German, Norwegian, Estonian, Chinese, Greek

Options
ANSUL Twin fire suppression system (CE requirement)
AutoMine® Loading: Onboard Package
Boom suspension (ride control)
Cabin lift kit (150 mm)
CE Declaration of conformity (CE requirement)
Collision Prevention System interface
Cover grills for lamps
Cover grills for windows
Disabled 4th gear
Door latch monitoring system
Driving direction lights (red / green)
Eclipse™ Fire suppression system with auto shutdown, Sustain or Extreme agent delivered separately (CE requirement)
Emergency steering (CE requirement)
High back rest seat with four point seatbelt
Integrated weighing system
Jump start interface
Line of sight radio remote control system
Monitoring camera system
Operator Speed Assist
Pre- and post-lubrication for turbo
Retrieval hook (hydraulic brake release by pulling the hook)
Safety rails
Seat comfort, mid backrest with two-point set belt
Spare rim 28.00-33/3.5 (for tyres 35/65R33)
Tyre pressure monitoring system
Traction control
Wiggins quick filling set for fuel, coolant and oils (hydraulic, engine and transmission)

Optional engine	
Diesel engine	Volvo TAD1384VE
Output	375 kW @ 1 900 rpm
Engine brake	Yes
Emissions (Ultra low sulphur fuel, AdBlue)	Euro Stage V
Average fuel consumption at 40% load	37.0 l/h
Compatible with paraffinic diesel fuel (EN 15940)	Yes

Available buckets

Type	Volume	Width	Max. material density
G.E.T. (standard)	8.0 m^3	3160 mm	2400 kg/m^3
G.E.T.	9.0 m^3	3170 mm	2100 kg/m^3
G.E.T.	10.7 m^3	3370 mm	1700 kg/m^3
G.E.T. Half Arrow	11.2 m^3	3690 mm	1700 kg/m^3
Bare Lip	8.0 m^3	3100 mm	2600 kg/m^3
Bare Lip	9.0 m^3	3300 mm	2200 kg/m^3
Bare Lip	10.7 m^3	3300 mm	1800 kg/m^3
MAKO	10.7 m^3	3400 mm	1700 kg/m^3

Grade performance									
Volvo TAD1344VE (Tier 2), 3 % rolling resistance, with lock-up									
Empty									
Percent grade	0.0	2.0	4.0	6.0	8.0	10.0	12.5	14.3	17.0
Ratio					1:12	1:10	1:8	1:7	1:6
1st gear (km/h)	4.7	4.7	4.6	4.6	4.6	4.6	4.6	4.6	4.5
2nd gear (km(h)	8.4	8.3	8.3	8.2	8.2	8.1	8.1	8.0	7.4
3rd gear (km/h)	14.6	14.4	14.3	14.1	13.1	11.6	9.0		
4th gear (km/h)	26.2	25.6	21.3						
Loaded									
Percent grade	0.0	2.0	4.0	6.0	8.0	10. 0	12.5	14.3	17.0
Ratio					1:12	1:10	1:8	1:7	1:6
1st gear (km/h)	4.7	4.6	4.6	4.6	4.6	4.6	4.5	4.5	4.5
2nd gear (km(h)	8.4	8.3	8.2	8.2	8.1	7.9	7.0	6.5	5.7
3rd gear (km/h)	14.5	14.3	14.1	12.1	10.3				
4th gear (km/h)	25.9	21.8							

Grade performance									
Volvo TAD1384VE (Stage V), 3 % rolling resistance, with lock-up									
Empty									
Percent grade	0.0	2.0	4.0	6.0	8.0	10.0	12.5	14.3	17.0
Ratio					1:12	1:10	1:8	1:7	1:6
1st gear (km/h)	5.1	5.0	5.0	5.0	5.0	5.0	4.9	4.9	4.9
2nd gear (km(h)	10.4	9.0	8.9	8.9	8.8	8.7	8.7	8.6	8.1
3rd gear (km/h)	15.7	15.6	15.4	15.2	14.5	12.7			
4th gear (km/h)	28.2	27.6	23.5						
Loaded									
Percent grade	0.0	2.0	4.0	6.0	8.0	10. 0	12.5	14.3	17.0
Ratio					1:12	1:10	1:8	1:7	1:6
1st gear (km/h)	5.0	5.0	5.0	5.0	4.9	4.9	4.9	4.9	4.8
2nd gear (km(h)	9.0	8.9	8.9	8.8	8.7	8.7	7.7	7.1	
3rd gear (km/h)	15.6	15.4	15.1	13.3	11.2	11.2			
4th gear (km/h)	27.8	24.0							

Dimensions with 8m³ G.E.T. bucket (standard)

The dimensions are indicative only

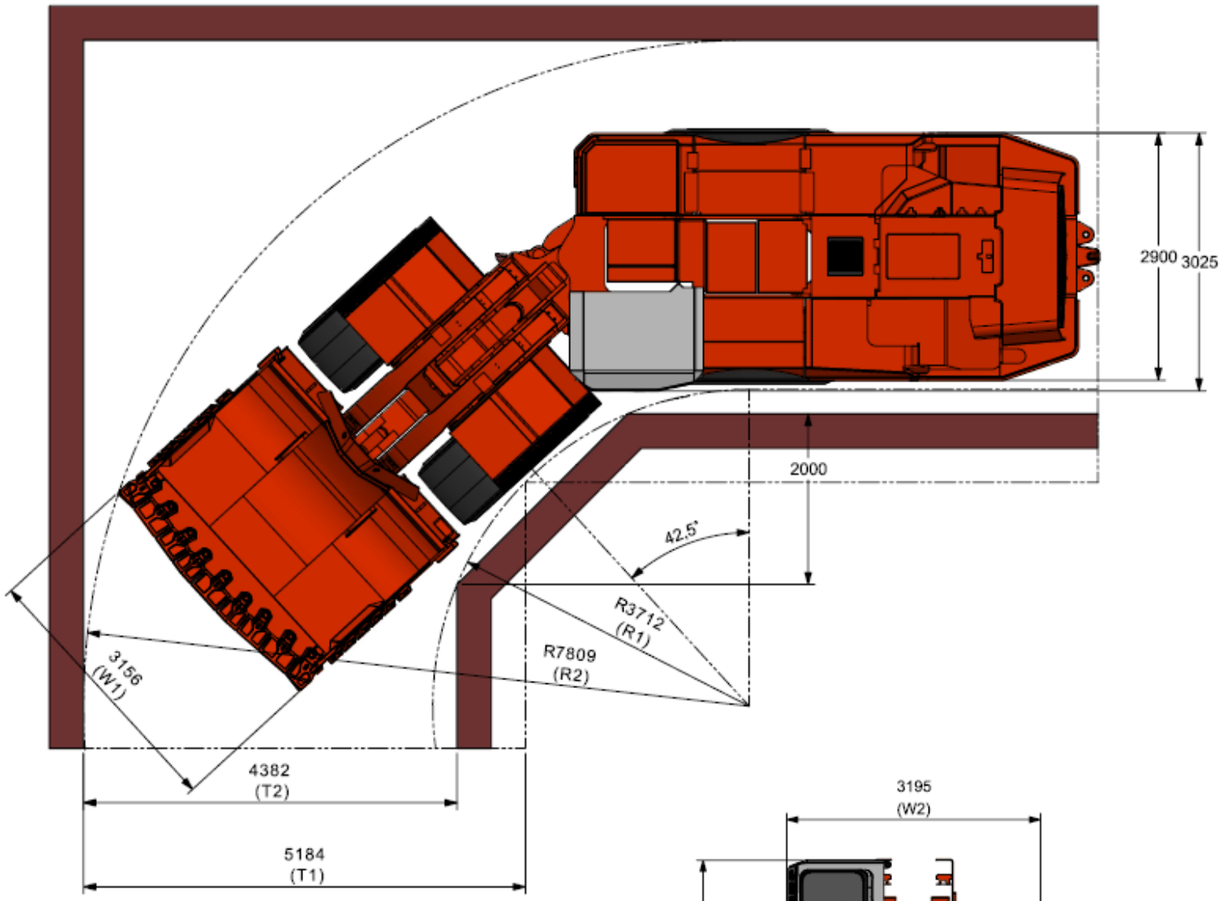

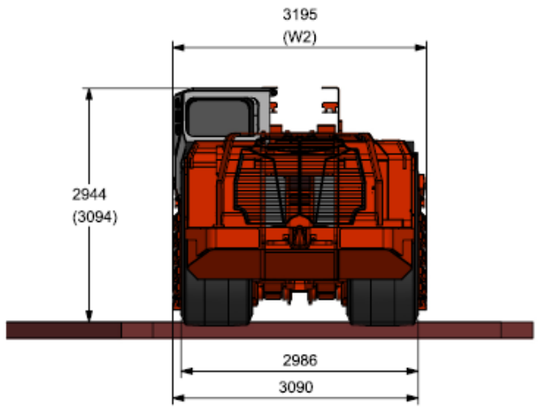

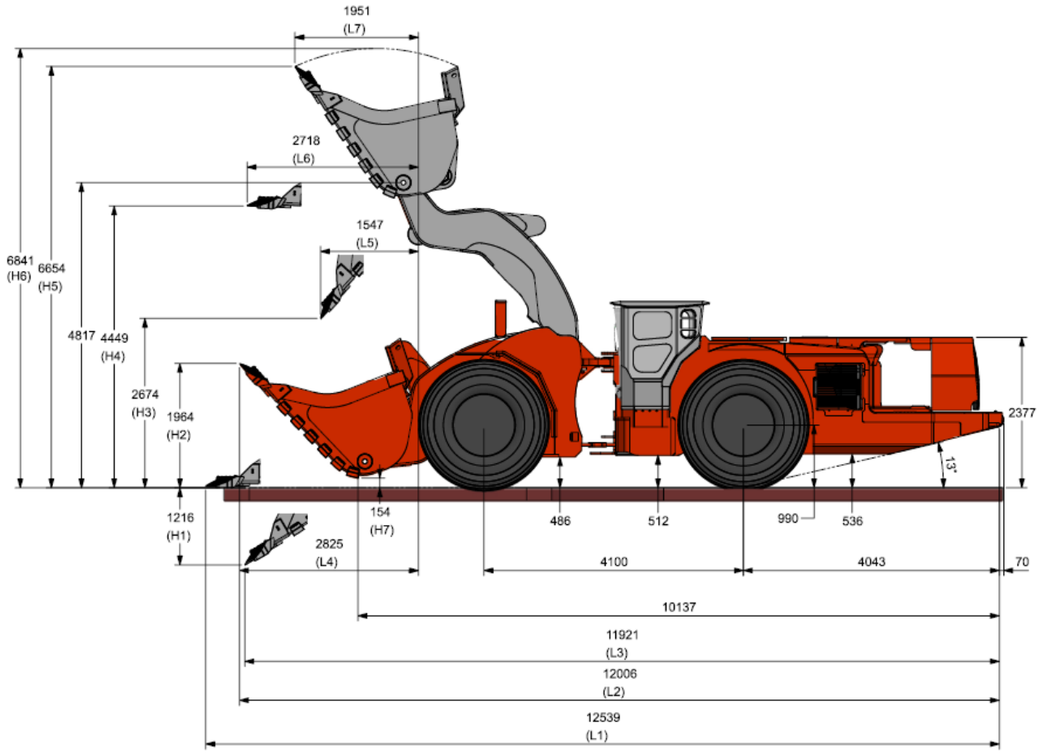

Dimensions			
Volume SAE heaped 2:1 (m^3) *	8.0	9.0	10.7
Max material broken density with fill factor 100% (kg/m^3)	2400	2100	1700
Lip plate type	G.E.T. (standard)	G.E.T.	G.E.T.
L1 (mm)	12539	12741	12588
L2 (mm)	12006	12717	12039
L3 (mm)	11921	12086	11961
L4 (mm)	2825	2961	2860
L5 (mm)	1547	1674	1577
L6 (mm)	2718	2915	2765
L7 (mm)	1951	2062	1978
H1 (mm)	1216	1324	1242
H2 (mm)	1964	2106	1994
H3 (mm)	2674	2523	2638
H4 (mm)	4449	4450	4449
H5 (mm)	6654	6816	6692
H6 (mm)	6841	7036	6915
H7 (mm)	154	169	140
W1 (mm)	3156	3156	3356
W2 (mm)	3195	3195	3395
R1 (mm)	3712	3712	3712
R2 (mm)	7809	7876	7915
T1 (mm)	5184	5252	5290
T2 (mm)	4382	4450	4488

Sandvik Group reserves the right to make changes to the information on this data sheet without prior notification to users.
Please contact a Sandvik representative for clarification on specifications and options.

TS3-LH621i-19-ENG-METRIC © Sandvik Group 2016 – 2026
SANDVIK is a registered trademark owned by Sandvik Group in Sweden and other countries.

Dimensions			
Volume SAE heaped 2:1 (m^3) *	8.0	9.0	10.7
Max material broken density with fill factor 100% (kg/m^3)	2600	2200	1800
Lip plate type	Bare Lip	Bare Lip	Bare Lip
L1 (mm)	12539	12590	12921
L2 (mm)	11999	12031	12256
L3 (mm)	11966	12008	12277
L4 (mm)	2819	2851	3076
L5 (mm)	1595	1624	1830
L6 (mm)	2747	2797	3119
L7 (mm)	1937	1963	2146
H1 (mm)	1201	1229	1405
H2 (mm)	2010	2050	2279
H3 (mm)	2675	2637	2389
H4 (mm)	4486	4486	4486
H5 (mm)	6699	6740	7005
H6 (mm)	6860	6924	7201
H7 (mm)	197	197	192
W1 (mm)	3100	3300	3300
W2 (mm)	3125	3300	3300
R1 (mm)	3712	3712	3712
R2 (mm)	7759	7862	7969
T1 (mm)	5134	5237	5345
T2 (mm)	4332	4435	4543