RD414

Hydraulic rock drill

Key features	
Hole diameter drilling	45 - 76 mm
Power class	14 kW
Percussion rate	56 - 78 Hz
Operating pressure Percussion Rotation (max).	 110 - 220 bar 160 bar
Rotation motor type	OMS 160 or OMS 200
Drill steels	R32, R35, T35, T38 Extension rods
Shanks	R32 (male) T38 (male) T35 (male)
Weight	180 kg

Sandvik RD414 hydraulic rock drill is designed for long hole drilling with a diameter range from 45 to 76 mm. It is used in Sandvik's underground and surface drill rigs.

Sandvik RD414 is a compact hydraulic percussive top hammer rock drill. It drills with air or water flushing. The rock drill is equipped with a stabilizer to control contact between the drill bit and rock.

These features ensure optimal drilling performance and high rock tool service life. Simple modular construction ensures excellent serviceability and reliability.

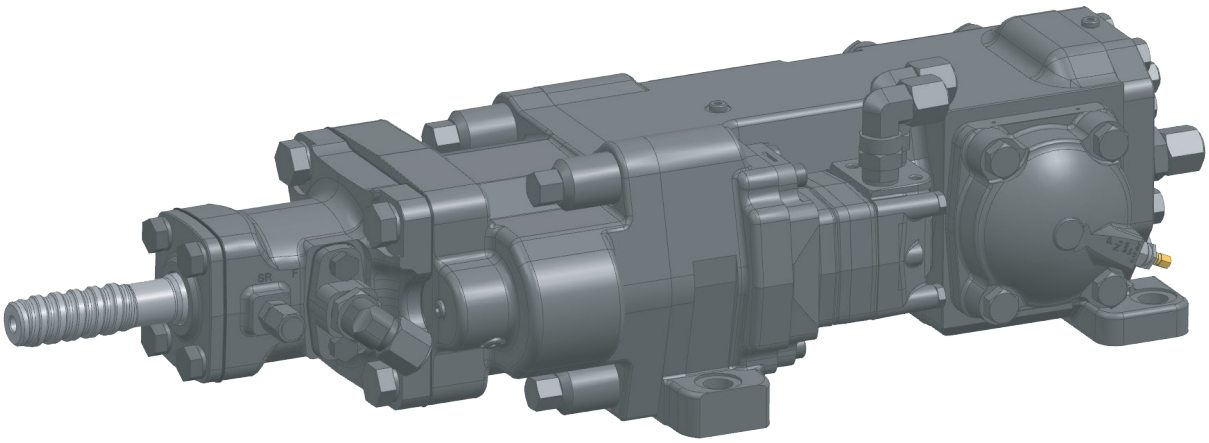

SANDVIK

TS2-178:03/ENG/METRIC © Sandvik Mining 2024 SANDVIK
is a registered trademark owned by Sandvik Intellectual Property AB in Sweden and other countries.

Technical drawing

All dimensions in mm

Rotation mechanism

Motor	Orbit type
Motor type 1	OMS 160
Torque (at 175 bar)	570 Nm
Rotation speed	0 - 300 rpm
Flow (at max speed)	75 l/min

Shank lubrication

Air flow	150 - 250 l/min
Pressure	4 - 5 bar
Oil consumption	150 - 250 g/h

Oil recommendation

Oil operating temperature	+40°C up to +60°C
Oil recommendation	See Sandvik drill rigs lubricant recommendation for detailed information

Rotation mechanism

Motor	Orbit type
Motor type 2	OMS 200
Torque (at 175 bar)	680 Nm
Rotation speed	0 - 240 rpm
Flow (at max speed)	75 l/min

Accumulators

Accumulator gas	Nitrogen N2
High pressure (HP)	40 bar
Low pressure (LP)	4 bar
Stabilizer	30 bar
Filling valve	Vg8 DIN7756

Options

Special tools for RD414 / Complete set	Spec sheet TS2-180
Special tools for RD414 / Field tools set	Spec sheet TS2-181

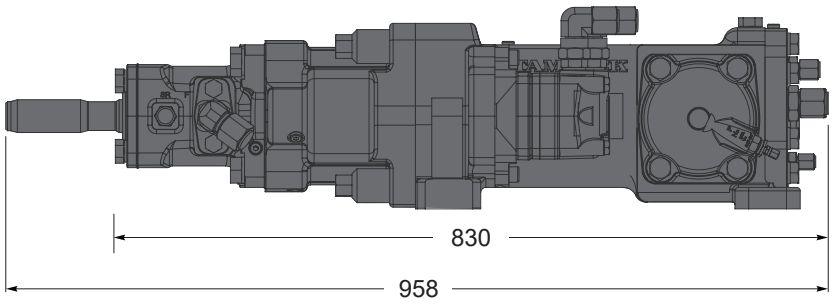

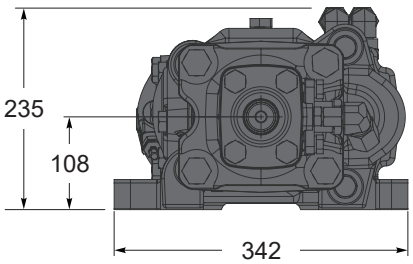

SANDVIK

Sandvik Mining reserves the right to make changes to the information on this data sheet without prior notification to users. Please contact a Sandvik representative for clarification on specifications and options.