RD314

Hydraulic rock drill

Key features

Hole diameter bolting	33 - 43 mm
Hole diameter drilling	43 - 51 mm
Hole diameter reaming	64 - 89 mm
Power class	14 kW
Percussion rate	110 Hz
Operating pressure Percussion (bolting) Percussion (drilling) Rotation (max.)	 120 - 180 bar 120 - 180 bar 175 bar
Rotation motor type	OMS 100 or OMS 125
Drill steels Bolting Drilling	 R32 - HEX25 - R25 HEX35 mm drifter rods
Shanks Bolting Drilling	 R32 (female) R32 (male short, only for bolting) R32 (male), T38 (male), T35 (male)
Weight	122 kg (bolting) 127 kg (drilling)

Sandvik RD314 high-frequency hydraulic rock drill is designed for bolting and face drilling rigs.

Sandvik RD314 can be used in electrically-controlled and hydraulically-controlled Sandvik drill rigs.

Sandvik RD314 is a compact, robust and universal hydraulic percussive rock drill. It is known for its hydraulic efficiency and high penetration rate.

Sandvik RD314 has excellent serviceability through modular construction and visual wear indicators. Service interval is 500 percussion hours.

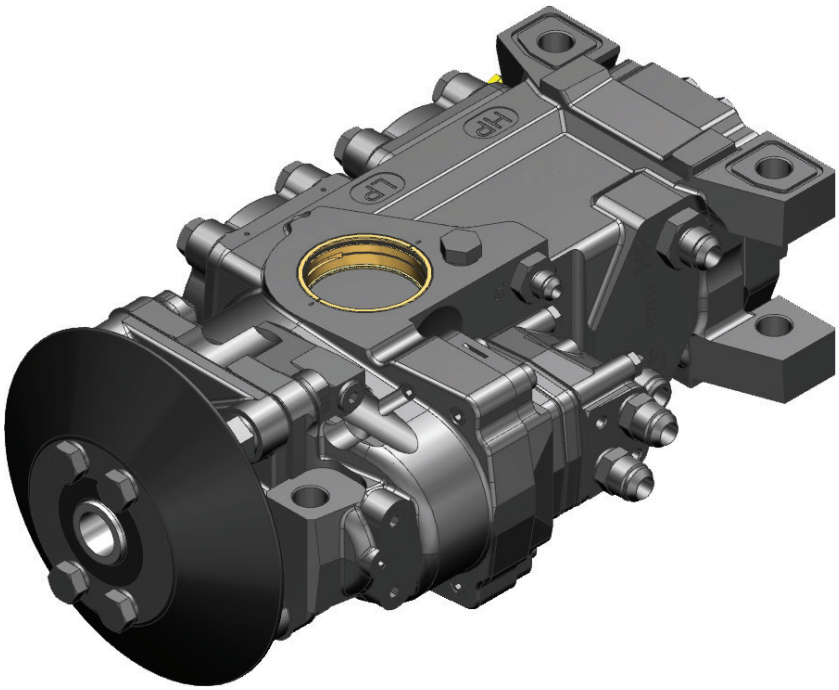

SANDVIK

TS2-137:04/ENG/METRIC © Sandvik Mining 2024 SANDVIK
is a registered trademark owned by Sandvik Intellectual Property AB in Sweden and other countries.

Technical drawing

All dimensions in mm

Rotation mechanism

Motor	Orbit type
Motor type 1	OMS 100
Torque (at 175 bar)	340 Nm
Rotation speed	0 - 530 rpm
Flow (at max speed)	75 l/min

Rotation mechanism

Motor	Orbit type
Motor type 2	OMS 125
Torque (at 175 bar)	420 Nm
Rotation speed	0 - 430 rpm
Flow (at max speed)	75 l/min

Accumulators

Accumulator gas	Nitrogen N2
High pressure (HP)	40 bar
Low pressure (LP)	4 bar
Filling valve	Vg8 DIN7756

Shank lubrication

Air flow	150 - 250 Nl/min
Pressure	4 - 5 bar
Oil consumption	100 - 200 g/h

Oil recommendation

Oil operating temperature	+40°C up to +60°C
Oil recommendation	See Sandvik drill rigs lubricant recommendation for detailed information

Options

Special tools for RD314 / Complete set	Spec sheet TS2-118
Special tools for RD314 / Field tools set	Spec sheet TS2-119

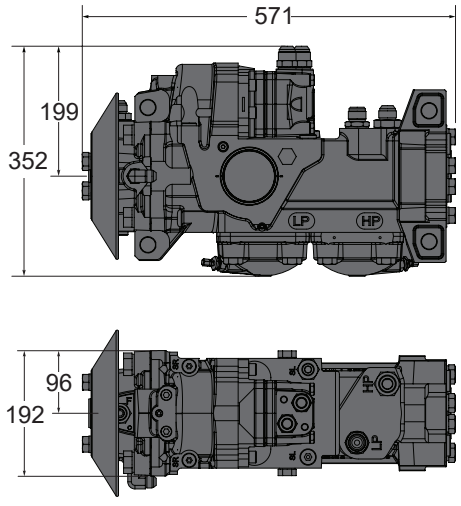

- Bolting application -

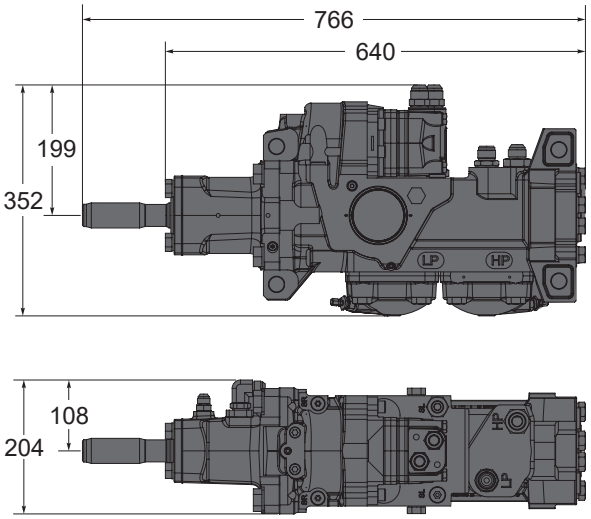

- Drilling application -

SANDVIK

Sandvik Mining reserves the right to make changes to the information on this data sheet without prior notification to users. Please contact a Sandvik representative for clarification on specifications and options.