HL650

Hydraulic rock drill

Key features

Hole diameter drilling	64 - 102 mm
Power class	17.5 kW
Percussion rate	44 - 56 Hz
Operating pressure Percussion Rotation (max.)	 100 - 170 bar 200 bar
Rotation motor type	OMT 200, OMT 250 or OMT 315
Drill steels	38 mm 45 mm 51 mm
Shanks 38 mm rods 45 mm rods 51 mm rods	 T38 / 600 T45 / 600 T51 / 600
Weight	245 - 300 kg

Sandvik HL650 hydraulic rock drill is designed for drilling 64 – 102 mm diameter holes. Sandvik HL650 is used in Sandvik surface drill rigs.

Sandvik HL650 is a heavy hydraulic percussive rock drill with independent rotation and separate flushing. High drilling capacity and reliability are achieved through functional modules.

Three rotation motor options are available for torque/speed adjustment. Optional power extractor guarantees trouble-free drilling in extreme conditions.

The design is covered by several patents.

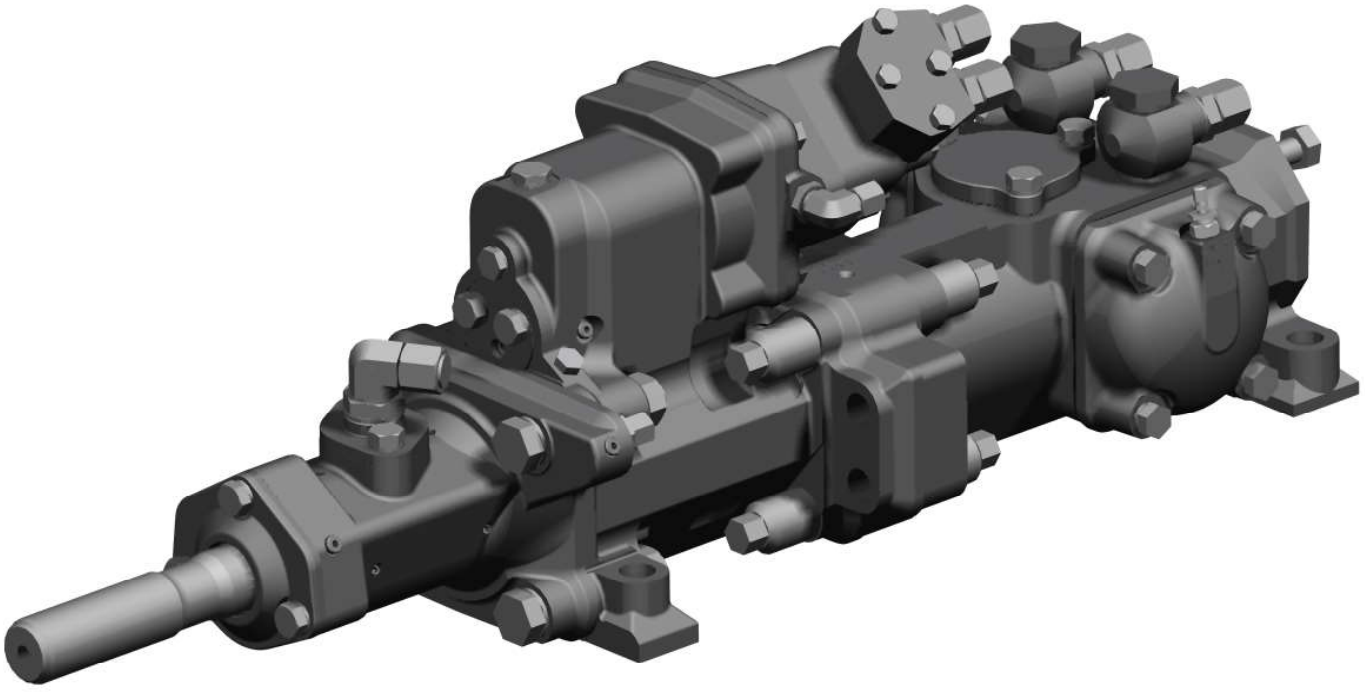

SANDVIK

Rotation mechanism			
Motor	Orbit type	Orbit type	Orbit type
Motor type	OMT 200	OMT 250	OMT 315
Torque (at 175 bar)	1095 Nm	1335 Nm	1766 Nm
Rotation speed	0 - 180 rpm	0 - 180 rpm	0 - 180 rpm
Flow (at max. speed)	79 l/min	99 l/min	128 l/min

Accumulators	
Accumulator gas	Nitrogen N2
High pressure (HP)	50 bar
Low pressure (LP)	4 bar
Filling valve	Vg8 DIN 7756

Options	
Special tools for HL650 / Complete set	ID 15073078
Special tools for HL650 / Field tools set	ID 15073488
Power extractor	See separate specification

Oil recommendation	
Oil operating temperature	+40°C up to +60°C
Oil recommendation	See Sandvik drill rigs lubricant recommendation for detailed information

Shank lubrication	
Air flow	200 - 300 l/min
Pressure	4 - 7 bar
Oil consumption	250 - 550 g/h

Flushing pressure	
Max. pressure (air / water)	20 bar

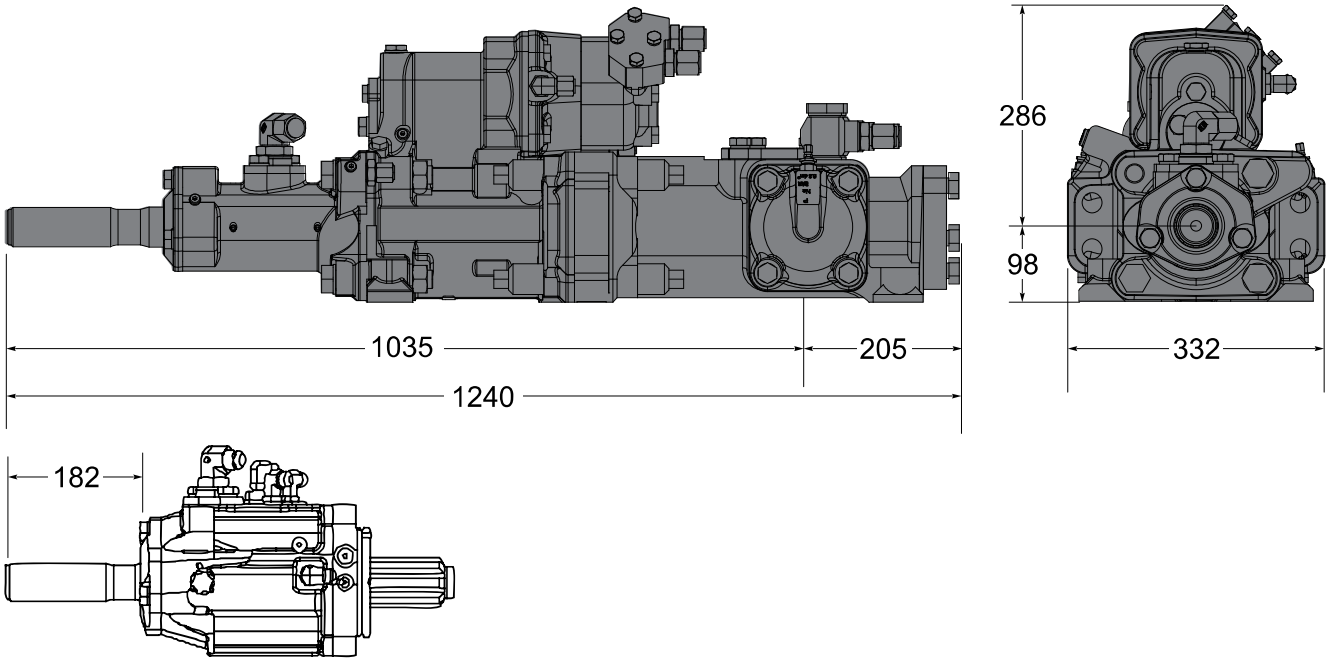

All dimensions in mm

Sandvik Mining reserves the right to make changes to the information on this data sheet without prior notification to users. Please contact a Sandvik representative for clarification on specifications and options.

TS2-249:01/ENG/METRIC © Sandvik Mining 2024 SANDVIK is a registered trademark owned by Sandvik Intellectual Property AB in Sweden and other countries.