HL1560T

Hydraulic rock drill

Technical data

Hole diameter	89 - 127 mm (with rods) 89 - 152 mm (with tube rods)
Power class	33 kW
Percussion rate	30 - 40 Hz
Operating pressure percussion Rotation (max.)	 90 - 200 bar 200 bar
Rotation motor type	OMT 400, OMT 500
Drill steels	T51, ST58, GT60, ST68
Shanks Ø65 mm rods Ø80 mm rods Ø80 mm rods Ø80 mm rods	 T51 / ST58 / GT60 - 760 GT60 - 760 ST68 - 630 ST58 / ST68 - 635
Weight	470 - 490 kg

Sandvik HL1560T hydraulic rock drill is designed for surface long-hole drilling of Ø89...152 mm (3½"...6") holes and it is standard on Pantera surface top hammer drills.

Sandvik HL1560T is a heavy hydraulic percussive rock drill with independent rotation and separate flushing, which ensures high reliability. It is equipped with hydraulic actuator ("stabilizer") to control contact between drill bit and rock. This ensures optimal drilling performance and high rock tool service life. Different rock drill versions are available through optional module offering: flushing device for tube drilling, T51 rods and GT60 rods; Power Extractor for tubes and rods and alternative rotation motor displacements. The design is covered by several patents.

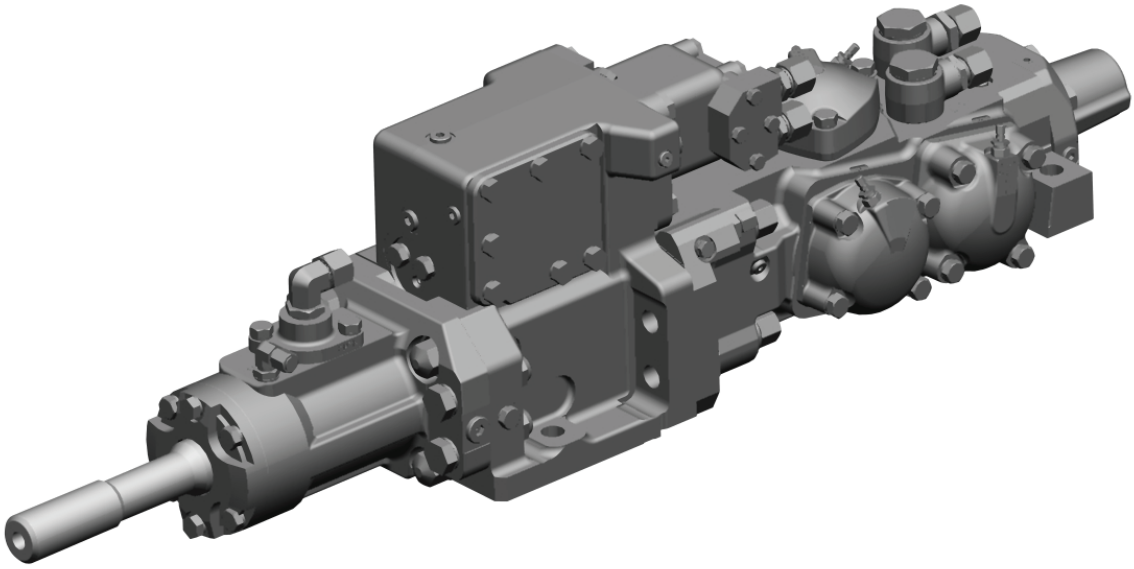

SANDVIK

TS2-238:01/ENG/METRIC © Sandvik Mining 2024 SANDVIK
is a registered trademark owned by Sandvik Intellectual Property AB in Sweden and other countries.

Technical drawing

All dimensions in mm

Rotation mechanism

Motor	Orbit type
Motor type 1	OMT 400
Torque (at 180 bar)	2005 Nm
Rotation speed	0 - 100 rpm
Flow (at max speed)	85 l/min

Flushing pressure

Max. pressure (air / water)	20 bar

Shank lubrication

Air flow (at 6 bar)	300 - 400 l/min
Pressure	4 - 7 bar
Oil consumption	600 - 1200 g/h

Actuator for shank control (stabilizer)

Operating principle	Hydraulic actuator for position control of shank adapter in rock drill, control force adjustable through pressure
Operating pressure	60 - 110 bar, adjustable

Oil recommendation

Oil operating temperature	+40°C up to +60°C
Oil recommendation	See Sandvik drill rigs lubricant recommendation for detailed information

Rotation mechanism

Motor	Orbit type
Motor type 2	OMT 500
Torque (at 170 bar)	2330 Nm
Rotation speed	0 - 100 rpm
Flow (at max speed)	113 l/min

Accumulators

Accumulator gas	Nitrogen N2
High pressure (HP)	50 bar
Low pressure (LP)	4 bar
Stabilizer	40 bar
Filling valve	Vg8 DIN7756

Options

Special tools for HL1560T Complete set	ID 550 387 95
Special tools for HL1560T Field tool set	ID 550 420 18
Power extractor	See separate specification

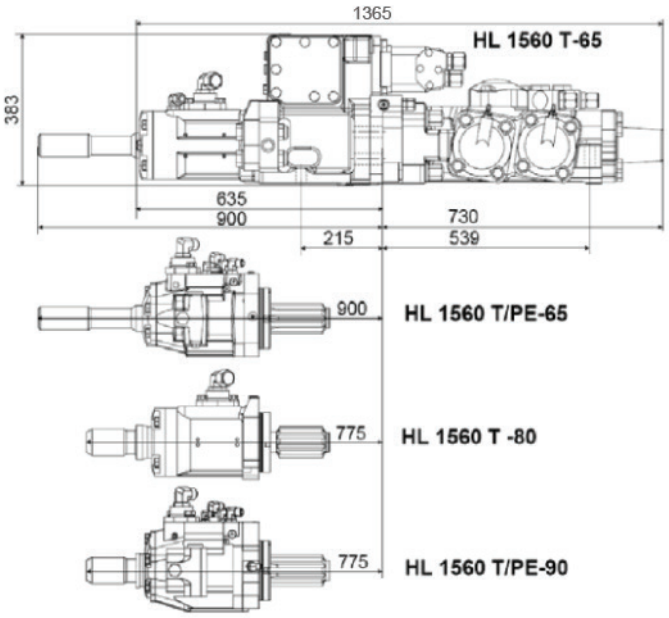

SANDVIK

Sandvik Mining reserves the right to make changes to the information on this data sheet without prior notification to users. Please contact a Sandvik representative for clarification on specifications and options.